Solicitation SB-10593

St. Amant High School - Modular Building Temporary Campus

Bid Designation: Public

Ascension Parish School Board

Bid SB-10593
St. Amant High School - Modular Building Temporary Campus

Bid Number	**SB-10593**
Bid Title	**St. Amant High School - Modular Building Temporary Campus**
Bid Start Date	**Oct 27, 2016 10:45:38 AM CDT**
Bid End Date	**Nov 22, 2016 1:00:00 PM CST**
Question & Answer End Date	**Nov 17, 2016 1:00:00 PM CST**
Bid Contact	**JEFF PARENT** **SUPERVISOR** **MAINENTANCE** **225-391-7313** **JEFF.PARENT@APSB.ORG**
Contract Duration	**One Time Purchase**
Contract Renewal	**Not Applicable**
Prices Good for	**30 days**
Pre-Bid Conference	**Nov 11, 2016 9:00:00 AM CST** **Attendance is mandatory** **Location: St. Amant High School** **12035 Hwy 431** **St. Amant, LA 70774**
Bid Comments	**Bid Walk Attendance is Mandatory. This will be construction of temporary campus with modular structures. Modular structures supplied by others.**

Item Response Form

Item	**SB-10593--01-01 · SB-10593, St. Amant High School - Modular Building Temporary Campus**
Quantity	**1 lump sum**
Unit Price	
Delivery Location	**Ascension Parish School Board** No Location Specified **Qty** 1 **Expected Expenditure** $1,200,000.00

Description
Bid Walk Attendance is Mandatory. This will be construction of temporary campus with modular structures. Modular structures supplied by others.

Project Manual

SB- 10593

St. Amant High School - Modular Building Temporary Campus

• • • • •

ASCENSION PUBLIC SCHOOLS
Every Child Successful In An Ever-Changing World

Ascension Parish School Board

• • • • •

October 27, 2016
Project No. C16-0071c

DOMAIN APAC ARCHITECTURE

8316 Kelwood Avenue, Baton Rouge, LA 70806
Ph (225) 216-3770 / Fax (225) 216-3771

Pages

DOCUMENT 00 00 10 – TABLE OF CONTENTS

Pages

- End of Table of Contents

1100 Webster Street
Donaldsonville, LA 70346
(225) 391-7000 (Gonzales) | (225) 257-2000 (Donaldsonville)
www.apsb.org

October 24, 2016

ADVERTISEMENT FOR BID

Sealed Bids will be received by the Ascension Public Schools, Attention Carl W. Fontenot, Purchasing Department, 1100 Webster Street, Donaldsonville, LA 70346, **not later than 1:00 p. m., Tuesday, November 22, 2016**, for the following:

SB-10593
St. Amant High School – Modular Building Temporary Campus

A **mandatory** Pre-Bid Conference will be held at 9:00 a. m., November 11, 2016, at the main office, at location and address -12035 Hwy 431, St. Amant, LA 70774. **No bid will be accepted from any contractor who does not attend and sign-in at the Pre-Bid Conference.** The Bids will be opened at the School Board Office immediately following the close of bid time on the above noted date.

Preliminary bid information may be obtained by contacting Mr. Carl Fontenot, Purchasing Manager, 1100 Webster Street, Donaldsonville, Louisiana 70346, 225/391-7133 or via **BidSync.com**.

It is the policy of the Ascension Public Schools to provide equal opportunities without regard to race, color, national origin, sex, age, disabilities, or veteran status in educational programs and activities. This includes, but is not limited to, admissions, educational services financial aid and employment.

ASCENSION PUBLIC SCHOOLS
/s/David Alexander
Superintendent

Insertion Dates: October 27, 2016
November 3, 2016
November 10, 2016

INSTRUCTIONS TO BIDDERS

Dated 12/4/15

ARTICLE 1
DEFINITIONS AND INTRODUCTION

1.1 The Bidding Documents and the Contract Documents include the following:
Advertisement for Bids, Instructions to Bidders, Bid Form, General Conditions of the Contract for Construction, AIA Document A 201, 2007 Edition, Supplementary General Conditions, Contract Between Owner and Contractor, AIA Document A 101, Standard Form of Agreement Between Owner and Contractor where the basis of payment is a STIPULATED SUM, Performance and Payment Bond(s), Specifications Divisions 1 through 33, Drawings, and Addenda.

1.2 The Owner of the proposed work is

Ascension Parish School Board
1100 Webster St.
P.O. Box 189
Donaldsonville, LA 70346

1.3 The title of work will be as indicated in the Advertisement for Bids.

1.4 All definitions set forth in the General Conditions of the Contract for Construction, AIA Document A 201 or in other Contract Documents are hereby made a part of the Instructions to Bidders.

1.5 **Addenda** are written or graphic instruments issued by the Architect prior to the opening of bids which modify or interpret the Bidding Documents by additions, deletions, clarifications, corrections and prior approvals.

1.6 A **Bid** is a complete and properly signed proposal to do the Work or designated portion thereof for the sums stipulated therein, submitted in accordance with the Bidding Documents.

1.7 The **Base Bid** is the sum stated in the Bid for which the Bidder offers to perform the Work described as the Base Bid, to which Work may be added for sums stated in Alternate Bids.

1.8 An **Alternate Bid** (or Alternate) is an amount stated in the Bid to be added to the amount of the Base Bid if the corresponding change in the Work or change in materials or methods of construction described in the Bidding Documents is accepted.

1.9 A **unit price** is an amount stated in the Bid as a price per unit of measurement for materials, equipment, or services or a portion of the Work as described in the Bidding Documents.

1.10 A **Bidder** is a person or entity who submits a Bid.

1.11 A **Sub-bidder** is a person or entity who submits a bid to a Bidder for materials, equipment, or labor for a portion of the Work.

1.12 **Architects and Engineers**: The Architect of record or his authorized representative, and the consulting Engineer(s) whose seal(s) occur on the Construction Documents will administer the construction contract.

1.13 **Bid Forms** can be found immediately following these instructions to bidders.

1.14 A **Unit Price** is an amount proposed by Bidder and stated on the Bid Form as a price per unit of measurement for materials and/or services that shall be added or deducted from the contract sum by Change Order in the event the estimated quantities of work required by the Contract Documents are increased or decreased.

ARTICLE 2

BIDDER'S REPRESENTATION

2.1 The Bidder by making his Bid represents that:

2.1.1 The Bidder has read and understands the Bidding Documents and his Bid is made in accordance therewith, and,

2.1.2 The Bidder has visited the site(s) and has familiarized himself with all of the local conditions under which the Work is to be performed, and has correlated the Bidder's personal observations with the requirements of the proposed Contract Documents, and,

2.1.3 The Bid is based upon the materials, systems, and equipment described in the Bidding Documents as advertised and as modified by Addenda, without exception, and,

2.1.4 The Bidder is fully qualified under all Louisiana State Laws, and all local licensing laws for Contractors in effect at the time and at the location(s) of the Work before submitting his Bid, and that all of his Sub-bidders or prospective Sub-contractors are duly licensed in accordance with all laws, (if required).

2.1.5 His bid is not based on any verbal instructions contrary to the Contract Documents and addenda.

ARTICLE 3
BIDDING DOCUMENTS

3.1 COPIES

3.1.1 Bidding Documents may be obtained directly from the Architect for a deposit of amount per set as described in Article 11. Deposits will be refunded only if Bidding Documents are received by the Architect within 10 days after bid date specified in the Advertisement for Bids. No deposits will be refunded if Bidding Documents are received late. No deposit will be refunded for returned torn, not bound, nor incomplete, partial sets of Bidding Documents which are not in good condition. The Architect will not call to warn bidders when Bidding Documents are due. Submit Louisiana Contractor's License Number, name and address phone, and fax when ordering plans.

3.1.2 Cost of postage paid by bidders to receive plans will not be refunded. All costs of postage or delivery to return sets of documents to the Architect shall be paid for by the company which procured said sets.

3.1.3 Bid documents are also available from this website: http://www.bidsync.com/

3.1.4 Bidders shall use complete sets of Bidding Documents in preparing bids; neither the Owner nor the Architect assumes responsibility for errors, omissions, and misinterpretations resulting from the use of incomplete sets of Bidding Documents. Prior to bidding, verify all specification page numbers and Drawing sheet numbers with the specified index to insure receipt of all documents.

3.1.5 The Owner or Architect in making copies of the Bidding Documents available on the above terms, do so only for the purpose of obtaining bids on the Work and do not confer a license or grant permission for any other use of the Bidding Documents.

3.2 INTERPRETATION OR CORRECTION OF BIDDING DOCUMENTS

3.2.1 The Bidder shall carefully study and compare the Bidding Documents with each other, and with other work of separate contractors to the extent that it relates to the Work for which the Bid is submitted, shall examine the site and all local conditions, and shall at once report to the Architect all ambiguities, inconsistencies, or errors discovered in the Bidding Documents or errors relating to the Project site.

3.2.2 Bidders and Sub-bidders requiring clarification or interpretation of the Bidding Documents shall make a written request to the Architect to reach him at least seven (7) working days, exclusive of weekends and holidays, prior to the date for receipt of Bids.

3.2.3 Interpretations, corrections, or changes of the Bidding Documents will be made by written Addendum. Interpretations, corrections, or changes of the Bidding Documents made in any other manner will not be binding, and Bidders shall not rely upon them.

3.3 SUBSTITUTIONS- (PRIOR APPROVAL REQUIRED)

3.3.1 The materials, products, and equipment described in the Bidding Documents establish a standard of required function, dimension, appearance and quality to be met by any proposed substitution.

3.3.2 No substitution will be considered prior to receipt of Bids unless a complete written request for approval has been submitted by the proposer and has been received by the Architect at least seven (7) working days, exclusive of weekends and legal holidays, prior to the date for receipt of Bids (RS 38:2295C).

3.3.3 All request shall include the name of the material or equipment for which it is to be substituted, the location, and a complete description of the proposed substitute including model numbers, colors, textures, drawings, cuts, performance and test data and all other detailed information necessary for a complete evaluation. A written statement setting forth all changes in other materials, equipment, or other portions of the Work including changes in the work of other contracts that incorporation of the proposed substitution would require shall be included.

3.3.4 The burden of proof of the merit of the proposed substitution is upon the proposer. Incomplete product submittals not indicating meeting the standards specified, colors, textures, actual samples, sufficient dimensions, quality, and strength of materials, and other standards specified will not be reviewed and will not be added to the list of prior approvals specified by addendum.

3.3.5 The Architect's decision of approval or disapproval of a proposed substitution shall be final.

3.3.6 The Architect reserves the right to reject products for which incomplete test data, samples, telephone numbers of users of products and information has been submitted. All test data and information shall meet or exceed standards specified. Manufacturers are responsible for submitting all information and all additional information requested by the Architect prior to the date specified above. Substitutions which require substantial revision of the Contract Documents will not be considered. The Architect reserves the right to reject materials and equipment proposed for this Project.

3.3.7 The Contractor shall have the option to use prior approval substitutions. No extra payment by Change Order will be approved for additional Work, materials, and equipment required to incorporate prior approved substitutions.

3.3.8 If the Architect approves a proposed substitution, prior to receipt of Bids, such approval will be set forth in a written Addendum. Bidders shall not rely upon approvals made in any other manner.

3.3.9 The Architect reserves the right to reject materials and equipment at a later date after opening of bids if it is detected by the Architect that incomplete or false information was submitted prior to bidding.

3.4 ADDENDA

3.4.1 Addenda will be attempted to be mailed by the Architect to all who are known by the Architect to have received a complete set of Bidding Documents. Because of errors in addresses, mistakes by mail carriers, and other human errors, all addenda are not always delivered to all bidders on time, all of the time.

3.4.2 All bidders who have received or who have reviewed bidding documents shall be responsible for verifying whether or not they have received all Addenda. Do not rely solely on mail, published reports, printed journals, published reports, or other delivery or information systems to verify receiving all Addenda.

3.4.3 All bidders shall be responsible for calling the Architect's Office within 72 hours prior to the date and time of opening of Bids to verify receipt of all Addenda issued by the Architect. All Bidders shall be responsible for picking up all Addenda not yet received from the Architect's office.

3.4.4 Copies of Addenda will be attempted to be made available for inspection wherever Bidding Documents are on file for that purpose, however, call the Architect to verify Addenda receipt.

3.4.5 Addenda shall normally not be issued within a period of seventy-two (72) hours, excluding weekends and any legal holiday, prior to the advertised time for the opening bids except an Addendum withdrawing the specified request for Bids, or one which includes postponement of the date for receipt of Bids. If it is necessary to issue an addendum within the seventy-two (72) hour period prior to receipt of bids, the receipt of such bids shall be extended a minimum of exactly seven (7) days, or more, up to 30 days without the requirement of re-advertising. The Owner shall be consulted prior to issuance of such an addendum, and shall approve such issuance.

3.4.6 All Bidders shall ascertain prior to submitting Bids that they have received all Addenda issued by the Architect, and all Bidders shall acknowledge said receipt in the space indicated on the Bid Form.

3.4.7 Failure to acknowledge receipt of all Addenda issued for this Project in the space(s) specified on the Bid Form will render the proposal informal and will cause its rejection.

3.4.8 All addenda shall become part of the Contract Documents. All Bidders shall be bound by all Addenda whether or not received by said Bidders.

3.4.9 The Owner shall have the right to extend the bid date by up to (30) days. Any such extensions shall be made by addendum issued by the Architect.

ARTICLE 4
BIDDING PROCEDURE

4.1 FORM AND STYLE OF BIDS

4.1.1 Bids shall be submitted on forms identical to the bid form included with the Bidding Documents, or as modified by Addenda. Legible copies of the bid form are acceptable.

4.1.2 All blanks on the bid form shall be filled in by typewriter or manually in ink.

4.1.3 Where so indicated by the makeup of the bid form, sums shall be expressed in both words and figures, and in case of discrepancy between the two, the written words shall govern.

4.1.4 Interlineations, alterations, and erasures of the filled in information shall be initialed by the signer of the Bid, or his duly authorized representative.

4.1.5 Bidders are cautioned to complete all alternates should such be required in the Bid Form. Failure to submit alternate prices will render the Proposal informal and will cause its rejection. If no change in the Base Bid is required by the Alternate, enter "No Change" for the Alternate(s), (if any).

4.1.6 The Bidder shall make no additional stipulations on the bid form nor qualify his Bid in any other manner.

4.1.7 The Bid shall include the legal name of Bidder and a statement that the Bidder is a sole proprietor, a partnership, a corporation, or other legal entity where indicated on the bid form. The Bid shall be signed by the person or persons legally authorized to bind the Bidder to the specified Contract. A Bid by a legal entity shall have filed in the Secretary of State's office a resolution indicating the names of all parties authorized to submit public bids for public contracts if required by State law, or a bid by a legal entity shall have a corporate resolution attached to the bid if required by State law, and shall give the state of incorporation. A Bid by a corporation shall have the person signing the Bid who is an officer of the corporation. A Bid submitted by an agent shall have a current Power of Attorney attached certifying the agent's authority to bind the Bidder. Verify complying with all Louisiana bidding law requirements prior to submitting bids.

4.1.8 On any bid in excess of fifty thousand dollars ($50,000.00), the Contractor shall certify that he is licensed under R. S. 37:2150-2163 and indicate his Louisiana Contractor's license number on the outside of the bid envelope.

4.2 BID SECURITY

4.2.1 No Bid will be considered or accepted unless the bid is accompanied by a bid security in an amount of not less than five percent (5%) of the Base Bid and all additive alternates. The bid security shall be in the form of a certified check or cashier's check drawn on a bank insured by the Federal Deposit Insurance Corporation, or a bid bond (A.I.A. Document A310) written by a surety company licensed to do business in Louisiana, countersigned by a person who is under contract with the surety company or bond issuer as a licensed agent in Louisiana who is residing in Louisiana and accompanied by appropriate power of attorney and in favor of the Owner. The surety company shall be licensed to do business in the State of Louisiana listed in the Department of the Treasury Circular 570, latest revision. The Surety Company shall have an A.M. Best Company minimum rating with a minimum financial size in accordance with the General Conditions. No company, regardless of the size or financial rating, will be allowed to write its own bond.

4.2.2 Bid security furnished by the Contractor shall guarantee that the Contractor shall, if awarded the Work according to the terms of his proposal, enter into the Contract and furnish Performance and Payment Bond(s) and insurance as required by these Contract Documents, within the time specified in the Supplemental General Conditions, Article 11 or after verbal or written notice has been issued that the instrument is ready for his signature.

4.2.3 Should the Bidder refuse to enter into such Contract or fail to furnish such bonds or insurance, the amount of the bid security shall be forfeited to the Owner as liquidated damages, not as penalty.

4.2.4 The Owner will have the right to retain the bid security of Bidders until either (a) the Contract has been executed and bonds and insurance have been furnished, or (b) the specified time has elapsed so that Bids may be withdrawn, or (c) all Bids have been rejected.

4.2.5 If the Bid Security attached to the bid form is a Bid Bond, then said Bid Bond shall be prepared as specified herein.

4.3 SUBMISSION OF BIDS

4.3.1 Bids, bid security, and all other additional required information, (if any, and if specified), shall be enclosed and sealed in an opaque bid envelope.

4.3.2 The outside of the bid envelope (or outermost envelope if mailed by and delivered by United States Mail, Express Mail, Priority Mail, UPS, Federal Express, and all other similar types of carrier delivery,) shall be labeled as follows:

- o Addressed to the Owner
- o Identify the name of the Bidder
- o Identify the sealed bid envelope exactly as follows, **Sealed Bid SB-** 10593
- o Identify the Louisiana Contractor's license number of the Bidder (if applicable)

- **Failure to label all envelopes or boxes exactly as stated above shall result in a MANDATORY rejection of this bid. APSB does not have the right to waive informalities as dictated by public bid law. Sole responsibility for properly labelling, mailing and delivering of bids is that of the bidder.**

4.3.3 Sealed Bids will be received by the Owner until the time and date, and at the location specified in the Advertisement for Bids.

4.3.4 Bidders submitting bids to the Owner's bid receipt location shall assume full responsibility for the timely delivery and Owner's receipt of bids at the specified location prior to the time and date specified for receipt of Bids.

4.3.5 Bids may also be submitted electronically via www.bidsync.com. Include all required bid documents by attaching them with electronic bids.

4.3.6 Owner's receipt of a bid for any reason after the date and time stipulated on the Advertisement for Bids, including but not limited to late delivery by carrier service, late mail, late hand delivery by anyone, leaving bid(s) with someone not specifically designated by the Owner to receive bid(s) prior to bid receipt, incorrect addresses, misunderstood information, misunderstood directions, or all other types of late delivery, and excuses shall disqualify the bid.

4.3.7 Thoroughly review Bid Form early to insure having all of the required information on time.

4.3.8 Bids received after the time and date specified for the receipt of bids will be returned unopened.

4.3.9 Oral, telephonic, "faxed", or telegraphic Bids or modifications to bids are invalid and will not receive consideration. The Owner will not consider notations written on the outside of the Bid Envelope which have the effect of the Bidder trying to amend the Bid.

4.3.10 Bids will be accepted only from Contractors that attend the Pre-Bid Conference. Date, time and location of the Pre-Bid Conference are indicated in the Advertisement for Bids.

4.4 MODIFICATION OR WITHDRAWAL OF BID

4.4.1 A bid may not be modified, withdrawn or cancelled by the Bidder during the time stipulated in the Advertisement for Bids, for the period following the time and bid date designated for the receipt of bids, and the Bidder so agrees in submitting his Bid, except in accordance with Act 111 of 1983 which states, in part, "Bids containing patently obvious mechanical, clerical, or mathematical errors may be withdrawn by the Contractor if clear and convincing sworn, written evidence of such errors is furnished to the public entity or Owner within forty-eight hours of the bid opening excluding Saturdays, Sundays and legal holidays".

4.4.2 Prior to the time and date designated for receipt of Bids, Bids submitted early may be modified or withdrawn only by notice to the party receiving Bids at the place and prior to the time designated for receipt of Bids. A change shall be so worded as not to reveal the amount of the original bid.

4.4.3 Withdrawn bids may be changed, re-sealed, and resubmitted up to the time designated for the receipt of Bids provided that they are then fully in conformance with these Instructions to Bidders and all of the Bidding Documents and Contract Documents.

4.4.4

4.4.5 Bid Security shall be in an amount sufficient for the Bid as modified or resubmitted.

ARTICLE 5
CONSIDERATION OF BIDS

5.1 RECEIPT OF BIDS

5.1.1 All properly identified Bids received on time will be opened publicly and will be read aloud as specified in the Advertisement for Bids.

5.1.2 Bids without Louisiana Contractor's license numbers on the bid envelopes may be opened and may be read aloud if it is thought that the proposed Project may be under $50,000.00. Said Bids may be acceptable if the Bids are under $50,000.00 and they meet all requirements of the Contract Documents.

5.2 REJECTION OF BIDS

5.2.1 The Owner will have the right to reject any or all Bids and in particular to reject a Bid not accompanied by a required bid security or data or information required by the Bidding Documents or reject a Bid which is in any way incomplete, irregular, or not in compliance with the Contract Documents.

5.3 ACCEPTANCE OF BID (AWARD)

5.3.1 Determination of the low Bidder shall be on the basis of the sum of the Base Bid, and the Alternates accepted by the Owner, (if any).

5.3.2 The Owner reserves the right to accept or reject alternates which, in the Owners judgement, is in the Owner's own best interest.

5.3.3 If the Owner decides to accept one (1) or more Alternates, (if any), and if accepting certain Alternates determines a low bidder, Alternate(s) will be accepted in numerical order.

5.3.4 If the Owner decides to accept one (1) or more Alternates, (if any), and if accepting certain Alternates does not determine a low bidder, Alternate(s) may be accepted out of numerical order.

ARTICLE 6
POST-BID INFORMATION

6.1 CONTRACTOR'S QUALIFICATION STATEMENT

6.1.1 Upon request by the Architect or the Owner, Bidders may be required to submit properly executed AIA Document A 305, Contractor's Qualification Statements. In addition, any bidder may be required, at the discretion of the Owner, to furnish evidence satisfactory to the Owner that his proposed subcontractors have sufficient means and experience in the types of work called for to assure completion of the contract in a satisfactory manner.

6.2 At the Pre-Construction Conference, the contractor shall submit the following information to the Architect.

6.2.1 A designation of the work to be performed by the Contractor with his own forces.

6.2.2 A breakdown of the contract cost attributable to each item listed in the Schedule of Values Form (attached). No payments will be made to the Contractor until this is received.

6.2.3 A list of names and business domiciles of all Subcontractors, manufacturers, suppliers or other persons or organizations (including those who are to furnish materials or equipment fabricated to a special design) proposed for the principal portions of the work. It is the preference of the Owner that, to the greatest extent possible or practical, the Contractor utilize Louisiana and Ascension Parish Subcontractors, manufacturers, suppliers and labor.

ARTICLE 7
PERFORMANCE AND PAYMENT BOND AND INSURANCE

7.1 BOND REQUIREMENTS

7.1.1 The Contractor shall furnish and pay for a performance and payment bond written by a company licensed to do business in Louisiana, and shall be countersigned by a person who is contracted with the surety company or bond issuer as an agent of the company or issuer, and who is licensed as an insurance agent in this state, and who is residing in Louisiana, in an amount equal to the 100% of the Contract amount to guarantee delivery of completed work under contract and payment for labor and materials. These bonds shall be written on A.I.A. Document A312, Current Edition. No company, regardless of size or financial rating, will be allowed to write its own bonds. The Surety Company shall have an A.M. Best Company minimum rating with a minimum financial size in accordance with the General Conditions. Bonds must be accompanied by letter stating bonding company's current rating for verification prior to acceptance by the Owner and execution of the formal Owner/Contractor agreement.

7.2 TIME OF DELIVERY

7.2.1 The Bidder shall hand deliver the specified required bond(s) to the Owner prior to the Owner's signing of the Contract. The Bidder shall be responsible for picking up a copy of the Contract from the Architect and delivering same to the bonding agency, securing the required, signed bond(s) and delivering same to the Architect and Owner in a very timely manner.

7.2.2 The bond(s) shall be dated on the date of commencement of Work indicated in the Contract.

7.2.3 The Bidder shall require the Attorney-in-Fact who executes the required bond(s) on behalf of the surety to affix thereto a certified and current copy of his power of Attorney.

7.2.4 Original insurance certificates, signed in ink, indicating amounts of insurance required, Louisiana Workmen's Compensation, and all other specified insurance shall be presented to the Owner with the bond(s). Copies of originals and "faxed" copies of certificates of insurance are not acceptable.

7.2.5 No actual physical on site work shall begin prior to securing specified insurance and bonds.

ARTICLE 8
FORM OF AGREEMENT BETWEEN OWNER AND CONTRACTOR

8.1 FORM TO BE USED

8.1.1 Unless otherwise specified, the form of the Contract to be used shall be AIA Document A101, Standard Form of Agreement between Owner and Contractor, 2007 Edition where the basis of payment is a Stipulated Sum. The agreement form will be prepared by the Architect for the Owner and issued to the Contractor for execution and returned to the Owner for signature. Executed bonds and insurance certificate must be submitted to the Owner by the Contractor within ten (10) days of the date of the Notice of Award.

8.2 AWARD

8.2.1 If awarded, the Contract will be let to the lowest responsible bidder whose base bid is within the project budget and is able to furnish satisfactory surety company bonds. Before award of the Contract, the successful bidder shall furnish to the Owner a certified copy of the minutes of the corporation or partnership meeting which authorized the party executing the bid to sign on behalf of the Contractor. Should all bids exceed the project budget, award will be made at option of the Owner to the lowest responsible bidder whose base bid is within funds available.

ARTICLE 9
COMPLETION TIME AND LIQUIDATED DAMAGES

9.1 The Bidder shall commence the Work under this Contract on a date specified by the Owner as specified in Article 8 of the Supplementary Conditions and to be substantially complete by January 25, 2017, with final completion by February 3, 2017.

9.2 Completion of the Contract shall be subject to such extensions as may be granted in the General Conditions and the Supplementary Conditions, or the Contractor will be subject to pay to the Owner Liquidated Damages per the following schedule:

SCHEDULE OF LIQUIDATED DAMAGES

Contract Amount	L.D. per Day
Up to $100,000	$ 100
$100,000 to $300,000	$ 175
$300,000 to $500.000	$ 200
$500,000 to $600,000	$ 250
$600,000 to $800,000	$ 400
$800,000 to $1,000,000	$ 600
$1,000,000 to $2,000,000	$ 700
$2,000,000 to $4,000,000	$ 800
$4,000,000 to $6,000,000	$ 1200
$6,000,000 to $8,000,000	$ 1600
$8,000,000 to $10,000,000	$ 1800
$10,000,000 to $12,000,000	$ 2000
$12,000,000 to $15,000,000	$ 2300
Above $15,000,000	To be determined

ARTICLE 10
ENVIRONMENTAL CONSIDERATIONS

10.1 Inspection and Testing for Asbestos Content of Building Materials:

NOTICE!
Building materials which are scheduled to be incorporated into the work under the agreement shall first either be certified by the Manufacturer to be asbestos free or be inspected and tested by accredited parties and certified to be free of asbestos content in accordance with by EPA, AHERA, and 1982 School Rules.

"Asbestos" means the Asbestiform varieties of: Chrysotile (Serpentine), Crocidolite (Riebecrite), Ammosite (cummingtonitegrunerite), Anthophyllite, Tremolite and Actinolite.

Materials shall not be incorporated into the work prior to the receipt of either manufacturer certification or accredited laboratory test results indicating the building material is asbestos free. Copies of the test reports shall be furnished to the Owner and the Architect.

The Owner reserves the right to inspect and take samples at random at the job site. Materials containing asbestos shall be removed immediately at the Contractor's expense using current EPA protocol for the removal of asbestos containing materials.

ARTICLE 11
ADDITIONAL BIDDER INFORMATION

11.1 Bidding Documents may be obtained from the Architect:

Firm Name: Domain Architecture
Contact Name: Chris Haftek
Address: 8316 Kelwood Avenue
City, Louisiana Zip Code: Baton Rouge, LA 70806
Phone: 225-216-3770
E-mail: chaftek@domain-dsgn.com

11.1.1 A plan deposit of $ 100.00 is required for each set of complete bidding documents requested. No partial sets will be issued.

11.1.2 If mailed sets are requested, add $ 20.00 non-refundable deposit for each set for postage and handling.

11.1.3 Deposits on the first set of documents issued to bonafide prime bidders (bidders submitting bids for the entire project on the specified project bid forms) will be fully refunded (100%) upon return of complete bound documents, received by the architect in good condition no later than ten (10) days after the bid date as specified in the Advertisement for Bids. All other sets of documents will be refunded (50%) of the deposit upon return of complete bound documents, received by the architect in good condition no later than ten (10) days after the bid date as specified in the Advertisement for Bids.

ARTICLE 12
POST-BID SUBMITTAL FORMS

12.1 Only the apparent low bidder is required to submit the following completed forms within ten days after bid opening. These blank forms are included in the project specifications manual.

- Attestation Clause Form
- Verification of Employees Affidavit
- Non-collusion Affidavit

12.2 The bidder SHOULD NOT include these forms in the bid envelope.

12.3 The apparent low bidder has a maximum of 10 days from the bid opening to produce any required post bid submittal forms If the apparent low bidder does not submit the proper information or documentation as required by the bidding documents within the ten-day period, such bidder shall be declared non-responsive, which will result in automatic disqualification of bid.

End of Instructions to Bidders

LOUISIANA UNIFORM PUBLIC WORK BID FORM

TO: Ascension Parish School Board
1100 Webster Street
P. O. Box 189
Donaldsonville, LA 70346
(Owner to provide name and address of owner)

BID FOR: Sealed Bid # 10593
St. Amant High School -
Modular Building Temporary Campus
(Owner to provide name of project and other identifying information)

The undersigned bidder hereby declares and represents that she/he; a) has carefully examined and understands the Bidding Documents, b) has not received, relied on, or based his bid on any verbal instructions contrary to the Bidding Documents or any addenda, c) has personally inspected and is familiar with the project site, and hereby proposes to provide all labor, materials, tools, appliances and facilities as required to perform, in a workmanlike manner, all work and services for the construction and completion of the referenced project, all in strict accordance with the Bidding Documents prepared by: Domain Architecture - A Professional Architectural Corporation and dated: October 27, 2016
(Owner to provide name of entity preparing bidding documents.)

Bidders must acknowledge all addenda. The Bidder acknowledges receipt of the following **ADDENDA:** (Enter the number the Designer has assigned to each of the addenda that the Bidder is acknowledging) _____ .

TOTAL BASE BID: For all work required by the Bidding Documents (including any and all unit prices designated "Base Bid" * but not alternates) the sum of:

_____Dollars ($ _____)

ALTERNATES: For any and all work required by the Bidding Documents for Alternates including any and all unit prices designated as alternates in the unit price description.

Alternate No. 1 *(Owner to provide description of alternate and state whether add or deduct)* for the lump sum of:

- not applicable - Dollars ($ - not applicable -)

Alternate No. 2 *(Owner to provide description of alternate and state whether add or deduct)* for the lump sum of:

- not applicable - Dollars ($ - not applicable -)

Alternate No. 3 *(Owner to provide description of alternate and state whether add or deduct)* for the lump sum of:

- not applicable - Dollars ($ - not applicable -)

NAME OF BIDDER: _____

ADDRESS OF BIDDER: _____

_____

LOUISIANA CONTRACTOR'S LICENSE NUMBER: _____

NAME OF AUTHORIZED SIGNATORY OF BIDDER: _____

TITLE OF AUTHORIZED SIGNATORY OF BIDDER: _____

SIGNATURE OF AUTHORIZED SIGNATORY OF BIDDER **: _____

DATE: _____

* The Unit Price Form shall be used if the contract includes unit prices. Otherwise it is not required and need not be included with the form. The number of unit prices that may be included is not limited and additional sheets may be included if needed.

** If someone other than a corporate officer signs for the Bidder/Contractor, a copy of a corporate resolution or other signature authorization shall be required for submission of bid. Failure to include a copy of the appropriate signature authorization, if required, may result in the rejection of the bid unless bidder has complied with La. R.S. 38:2212(A)(1)(c) or RS 38:2212(O) .

BID SECURITY in the form of a bid bond, certified check or cashier's check as prescribed by LA RS 38:2218.A is attached to and made a part of this bid.

LOUISIANA UNIFORM PUBLIC WORK BID FORM
UNIT PRICE FORM

TO:
Ascension Parish School Board
1100 Webster Street
P. O. Box 189
Donaldsonville, LA 70346
(Owner to provide name and address of owner)

BID FOR:
Sealed Bid # 10593
St. Amant High School -
Modular Building Temporary Campus
(*Owner to provide name of project and other identifying information)*

UNIT PRICES: This form shall be used for any and all work required by the Bidding Documents and described as unit prices. Amounts shall be stated in figures and only in figures.

DESCRIPTION:	☐ Base Bid or ☐ Alt.# ___			
REF. NO.	QUANTITY:	UNIT OF MEASURE:	UNIT PRICE	UNIT PRICE EXTENSION *(Quantity times Unit Price)*

DESCRIPTION:	☐ Base Bid or ☐ Alt.# ___			
REF. NO.	QUANTITY:	UNIT OF MEASURE:	UNIT PRICE	UNIT PRICE EXTENSION *(Quantity times Unit Price)*

DESCRIPTION:	☐ Base Bid or ☐ Alt.# ___			
REF. NO.	QUANTITY:	UNIT OF MEASURE:	UNIT PRICE	UNIT PRICE EXTENSION *(Quantity times Unit Price)*

DESCRIPTION:	☐ Base Bid or ☐ Alt.# ___			
REF. NO.	QUANTITY:	UNIT OF MEASURE:	UNIT PRICE	UNIT PRICE EXTENSION *(Quantity times Unit Price)*

DESCRIPTION:	☐ Base Bid or ☐ Alt.# ___			
REF. NO.	QUANTITY:	UNIT OF MEASURE:	UNIT PRICE	UNIT PRICE EXTENSION *(Quantity times Unit Price)*

DESCRIPTION:	☐ Base Bid or ☐ Alt.# ___			
REF. NO.	QUANTITY:	UNIT OF MEASURE:	UNIT PRICE	UNIT PRICE EXTENSION *(Quantity times Unit Price)*

DESCRIPTION:	☐ Base Bid or ☐ Alt.# ___			
REF. NO.	QUANTITY:	UNIT OF MEASURE:	UNIT PRICE	UNIT PRICE EXTENSION *(Quantity times Unit Price)*

Wording for "DESCRIPTION" is to be provided by the Owner.
All quantities are estimated. The contractor will be paid based upon actual quantities as verified by the Owner

Document 004300 – Bid Bond

American Institute for Architects, AIA Document A310, 2010 edition, Bid Bond Form, is included in this project by reference.

Obtain this copyrighted form by purchasing from AIA-Louisiana office (tel. 225-387-5579), or other agencies authorized to issue this form.

Complete and submit this form with the Bid.

St. Amant High School -
Modular Building Temporary Campus — **SB - 10593**
Name of Project — **Project No.**

ATTESTATION CLAUSE REQUIRED BY LA. R.S. 38:2227 (PAST CRIMINAL CONVICTIONS OF BIDDERS)

Appearer, as a Bidder on the above-entitled Public Works Project, does hereby attest that:

A. No sole proprietor or individual partner, incorporator, director, manager, officer, organizer, or member who has a minimum of a ten percent (10%) ownership in the bidding entity named below has been convicted of, or has entered a plea of guilty or nolo contendere to any of the following state crimes or equivalent federal crimes:

(a) Public bribery (R.S. 14:118)
(b) Corrupt influencing (R.S. 14:120)
(c) Extortion (R.S. 14:66)
(d) Money laundering (R.S. 14:23)

B. Within the past five years from the project bid date, no sole proprietor or individual partner, incorporator, director, manager, officer, organizer, or member who has a minimum of a ten percent (10%) ownership in the bidding entity named below has been convicted of, or has entered a plea of guilty or nolo contendere to any of the following state crimes or equivalent federal crimes, during the solicitation or execution of a contract or bid awarded pursuant to the provisions of Chapter 10 of Title 38 of the Louisiana Revised Statutes:

(a) Theft (R.S. 14:67)
(b) Identity Theft (R.S. 14:67.16)
(c) Theft of a business record (R.S.14:67.20)
(d) False accounting (R.S. 14:70)
(e) Issuing worthless checks (R.S. 14:71)
(f) Bank fraud (R.S. 14:71.1)
(g) Forgery (R.S. 14:72)
(h) Contractors; misapplication of payments (R.S. 14:202)
(i) Malfeasance in office (R.S. 14:134)

_____ _____
NAME OF BIDDER **NAME OF AUTHORIZED SIGNATORY OF BIDDER**

_____ _____
DATE **TITLE OF AUTHORIZED SIGNATORY OF BIDDER**

_____
SIGNATURE OF AUTHORIZED SIGNATORY OF BIDDER

AFFIDAVIT

LA. R.S. 38:2212.10 Verification of Employees

STATE OF _____

PARISH/COUNTY OF _____

BEFORE ME, the undersigned authority, duly commissioned and qualified within and for the state and parish or county aforesaid, personally came and appeared _____
(name/print or type)

representing_____, _____
(company/print or type) (mailing address/print or type)

who, being by me first duly sworn deposed and said that he or she has read and signed this Affidavit and he/she does hereby attest, under oath, as follows:

A. At the time of bidding, Appearer is registered and participates in a status verification system to verify that all new hires in the state of Louisiana are legal citizens of the United States or are legal aliens.

B. If awarded the contract, Appearer shall continue, during the term of the contract, to utilize a status verification system to verify the legal status of all new employees in the state of Louisiana.

C. If awarded the contract, Appearer shall require all subcontractors to submit to it a sworn affidavit verifying compliance with Paragraphs (A) and (B) of this Subsection.

Prospective bidder or representative to sign **and** type or print name below signature

_____
Affiant – Signature

_____
Printed Name

SWORN TO AND SUBSCRIBED BEFORE ME THIS _____day of_____, 2_____.

_____
NOTARY PUBLIC

NON-COLLUSION AFFIDAVIT

STATE OF LOUISIANA SCHOOL: St. Amant High School - _____

ASCENSION PARISH SCHOOL BOARD PROJECT: Modular Building Temporary Campus

AFFIDAVIT

BEFORE ME, the undersigned authority, duly commissioned and qualified within and for the state and parish aforesaid, personally came and appeared _____ representing _____ who, being by me first duly sworn deposed and said that he has read this affidavit and does hereby agree under oath to comply with all provisions herein as follows:

Section 2224 of Part II of Chapter 10 of Title 38 of the La. Revised Statutes of 1950 as amended.

(1) That affiant and his firm employed no person, corporation, firm, association, or other organization, either directly or indirectly, to secure the public contract for the above-referenced project with the Ascension Parish School Board under which he will, if awarded the contract, receive or received payment, other than persons regularly employed by the affiant whose services in connection with the construction, alteration or demolition of the public building or project or in securing the public contract were in the regular course of their duties for affiant; and

(2) That no part of the contract price to be received or received by affiant or his firm was paid or will be paid to any person, corporation, firm, association, or other organization for soliciting the contract, other than the payment of their normal compensation to persons regularly employed by the affiant whose services in connection with the construction of the public building or project were in the regular course of their duties for affiant.

Bidder or representative to sign
and type name below signature➔

_____AFFIANT

SWORN TO AND SUBSCRIBED BEFORE ME THIS _____ DAY OF _____, 20__.

_____
NOTARY PUBLIC

Note: This form is to be removed and attached to the Bid Proposal Form.

Document 005200 - Agreement

American Institute for Architects, AIA Document A101, 2007 edition, Standard Form of Agreement between Owner & Contractor, is included in this project by reference.

Upon request to the Architect, copies will be furnished for reference.

Document 006000 - Performance Bond, and Labor and Material Payment Bond

American Institute for Architects, AIA Document A312, Performance Bond, and Labor and Material Payment Bond, is included in this project by reference.

Upon request to the Architect, copies will be furnished for reference.

AIA® Document A201™ – 2007

General Conditions of the Contract for Construction

for the following PROJECT:
(Name and location or address)
Projects for Ascension Parish School Board

THE OWNER:
(Name, legal status and address)
Ascension Parish School Board
1100 Webster Street
Donaldsonville, Louisiana

THE ARCHITECT:
(Name, legal status and address)
Domain Architecture – A Professional Architectural Corporation
(a merger of Noland & Wong, and Domain Design Architecture)
8316 Kelwood Avenue
Baton Rouge, Louisiana 70806

ADDITIONS AND DELETIONS:
The author of this document has added information needed for its completion. The author may also have revised the text of the original AIA standard form. An *Additions and Deletions Report* that notes added information as well as revisions to the standard form text is available from the author and should be reviewed. A vertical line in the left margin of this document indicates where the author has added necessary information and where the author has added to or deleted from the original AIA text.

This document has important legal consequences. Consultation with an attorney is encouraged with respect to its completion or modification.

TABLE OF ARTICLES

Init.
/

INDEX
(Topics and numbers in bold are section headings.)

Init.
/

ARTICLE 1 GENERAL PROVISIONS

§ 1.1 BASIC DEFINITIONS

§ 1.1.1 THE CONTRACT DOCUMENTS

The Contract Documents are enumerated in the Agreement between the Owner and Contractor (hereinafter the Agreement) and consist of the Agreement, Conditions of the Contract (General, Supplementary and other Conditions), Drawings, Specifications, Addenda issued prior to execution of the Contract, other documents listed in the Agreement and Modifications issued after execution of the Contract. A Modification is (1) a written amendment to the Contract signed by both parties, (2) a Change Order, (3) a Construction Change Directive or (4) a written order for a minor change in the Work issued by the Architect. (see Supplementary Conditions)

§ 1.1.2 THE CONTRACT

The Contract Documents form the Contract for Construction. The Contract represents the entire and integrated agreement between the parties hereto and supersedes prior negotiations, representations or agreements, either written or oral. The Contract may be amended or modified only by a Modification. The Contract Documents shall not be construed to create a contractual relationship of any kind (1) between the Contractor and the Architect or the Architect's consultants, (2) between the Owner and a Subcontractor or a Sub-subcontractor, (3) between the Owner and the Architect or the Architect's consultants or (4) between any persons or entities other than the Owner and the Contractor. The Architect shall, however, be entitled to performance and enforcement of obligations under the Contract intended to facilitate performance of the Architect's duties.

§ 1.1.3 THE WORK

The term "Work" means the construction and services required by the Contract Documents, whether completed or partially completed, and includes all other labor, materials, equipment and services provided or to be provided by the Contractor to fulfill the Contractor's obligations. The Work may constitute the whole or a part of the Project.

§ 1.1.4 THE PROJECT

The Project is the total construction of which the Work performed under the Contract Documents may be the whole or a part and which may include construction by the Owner and by separate contractors.

§ 1.1.5 THE DRAWINGS

The Drawings are the graphic and pictorial portions of the Contract Documents showing the design, location and dimensions of the Work, generally including plans, elevations, sections, details, schedules and diagrams.

§ 1.1.6 THE SPECIFICATIONS

The Specifications are that portion of the Contract Documents consisting of the written requirements for materials, equipment, systems, standards and workmanship for the Work, and performance of related services.

§ 1.1.7 INSTRUMENTS OF SERVICE

Instruments of Service are representations, in any medium of expression now known or later developed, of the tangible and intangible creative work performed by the Architect and the Architect's consultants under their respective professional services agreements. Instruments of Service may include, without limitation, studies, surveys, models, sketches, drawings, specifications, and other similar materials.

§ 1.1.8 INITIAL DECISION MAKER

The Initial Decision Maker is the person identified in the Agreement to render initial decisions on Claims in accordance with Section 15.2 and certify termination of the Agreement under Section 14.2.2.

§ 1.1.9 to § 1.1.16 (see Supplementary Conditions)

§ 1.2 CORRELATION AND INTENT OF THE CONTRACT DOCUMENTS

§ 1.2.1 The intent of the Contract Documents is to include all items necessary for the proper execution and completion of the Work by the Contractor. The Contract Documents are complementary, and what is required by one shall be as binding as if required by all; performance by the Contractor shall be required only to the extent consistent with the Contract Documents and reasonably inferable from them as being necessary to produce the indicated results. (see Supplementary Conditions)

§ 1.2.2 Organization of the Specifications into divisions, sections and articles, and arrangement of Drawings shall not control the Contractor in dividing the Work among Subcontractors or in establishing the extent of Work to be performed by any trade.

§ 1.2.3 Unless otherwise stated in the Contract Documents, words that have well-known technical or construction industry meanings are used in the Contract Documents in accordance with such recognized meanings.

§ 1.3 CAPITALIZATION
Terms capitalized in these General Conditions include those that are (1) specifically defined, (2) the titles of numbered articles or (3) the titles of other documents published by the American Institute of Architects.

§ 1.4 INTERPRETATION
In the interest of brevity the Contract Documents frequently omit modifying words such as "all" and "any" and articles such as "the" and "an," but the fact that a modifier or an article is absent from one statement and appears in another is not intended to affect the interpretation of either statement.

§ 1.5 OWNERSHIP AND USE OF DRAWINGS, SPECIFICATIONS AND OTHER INSTRUMENTS OF SERVICE
§ 1.5.1 The Contractor, Subcontractors, Sub-subcontractors, and material or equipment suppliers shall not own or claim a copyright in the Instruments of Service. Submittal or distribution to meet official regulatory requirements or for other purposes in connection with this Project is not to be construed as publication. (see Supplementary Conditions)

§ 1.5.2 The Contractor, Subcontractors, Sub-subcontractors and material or equipment suppliers are authorized to use and reproduce the Instruments of Service provided to them solely and exclusively for execution of the Work. All copies made under this authorization shall bear the copyright notice, if any, shown on the Instruments of Service. The Contractor, Subcontractors, Sub-subcontractors, and material or equipment suppliers may not use the Instruments of Service on other projects or for additions to this Project outside the scope of the Work without the specific written consent of the Owner, Architect and the Architect's consultants.

§ 1.6 TRANSMISSION OF OATA IN DIGITAL FORM
If the parties intend to transmit Instruments of Service or any other information or documentation in digital form, they shall endeavor to establish necessary protocols governing such transmissions, unless otherwise already provided in the Agreement or the Contract Documents.

ARTICLE 2 OWNER
§ 2.1 GENERAL
§ 2.1.1 The Owner is the person or entity identified as such in the Agreement and is referred to throughout the Contract Documents as if singular in number. The Owner shall designate in writing a representative who shall have express authority to bind the Owner with respect to all matters requiring the Owner's approval or authorization. Except as otherwise provided in Section 4.2.1, the Architect does not have such authority. The term "Owner" means the Owner or the Owner's authorized representative.

§ 2.1.2 The Owner shall furnish to the Contractor within fifteen days after receipt of a written request, information necessary and relevant for the Contractor to evaluate, give notice of or enforce mechanic's lien rights. Such information shall include a correct statement of the record legal title to the property on which the Project is located, usually referred to as the site, and the Owner's interest therein. (see Supplementary Conditions)

§ 2.2 INFORMATION AND SERVICES REQUIRED OF THE OWNER
§ 2.2.1 deleted (see Supplementary Conditions)

§ 2.2.2 Except for permits and fees that are the responsibility of the Contractor under the Contract Documents, including those required under Section 3.7.1, the Owner shall secure and pay for necessary approvals, easements, assessments and charges required for construction, use or occupancy of permanent structures or for permanent changes in existing facilities.

§ 2.2.3 The Owner shall furnish surveys describing physical characteristics, legal limitations and utility locations for the site of the Project, and a legal description of the site. The Contractor shall be entitled to rely on the accuracy of

information furnished by the Owner but shall exercise proper precautions relating to the safe performance of the Work. (see Supplementary Conditions)

§ 2.2.4 The Owner shall furnish information or services required of the Owner by the Contract Documents with reasonable promptness. The Owner shall also furnish any other information or services under the Owner's control and relevant to the Contractor's performance of the Work with reasonable promptness after receiving the Contractor's written request for such information or services.

§ 2.2.5 Unless otherwise provided in the Contract Documents, the Owner shall furnish to the Contractor one copy of the Contract Documents for purposes of making reproductions pursuant to Section 1.5.2.

§ 2.3 OWNER'S RIGHT TO STOP THE WORK

If the Contractor fails to correct Work that is not in accordance with the requirements of the Contract Documents as required by Section 12.2 or repeatedly fails to carry out Work in accordance with the Contract Documents, the Owner may issue a written order to the Contractor to stop the Work, or any portion thereof, until the cause for such order has been eliminated; however, the right of the Owner to stop the Work shall not give rise to a duty on the part of the Owner to exercise this right for the benefit of the Contractor or any other person or entity, except to the extent required by Section 6.1.3.

§ 2.4 OWNER'S RIGHT TO CARRY OUT THE WORK

If the Contractor defaults or neglects to carry out the Work in accordance with the Contract Documents and fails within a ten-day period after receipt of written notice from the Owner to commence and continue correction of such default or neglect with diligence and promptness, the Owner may, without prejudice to other remedies the Owner may have, correct such deficiencies. In such case an appropriate Change Order shall be issued deducting from payments then or thereafter due the Contractor the reasonable cost of correcting such deficiencies, including Owner's expenses and compensation for the Architect's additional services made necessary by such default, neglect or failure. Such action by the Owner and amounts charged to the Contractor are both subject to prior approval of the Architect. If payments then or thereafter due the Contractor are not sufficient to cover such amounts, the Contractor shall pay the difference to the Owner.

§ 2.5 & § 2.6 (see Supplementary Conditions)

ARTICLE 3 CONTRACTOR

§ 3.1 GENERAL

§ 3.1.1 The Contractor is the person or entity identified as such in the Agreement and is referred to throughout the Contract Documents as if singular in number. The Contractor shall be lawfully licensed, if required in the jurisdiction where the Project is located. The Contractor shall designate in writing a representative who shall have express authority to bind the Contractor with respect to all matters under this Contract. The term "Contractor" means the Contractor or the Contractor's authorized representative.

§ 3.1.2 The Contractor shall perform the Work in accordance with the Contract Documents.

§ 3.1.3 The Contractor shall not be relieved of obligations to perform the Work in accordance with the Contract Documents either by activities or duties of the Architect in the Architect's administration of the Contract, or by tests, inspections or approvals required or performed by persons or entities other than the Contractor.

§ 3.2 REVIEW OF CONTRACT DOCUMENTS AND FIELD CONDITIONS BY CONTRACTOR

§ 3.2.1 Execution of the Contract by the Contractor is a representation that the Contractor has visited the site, become generally familiar with local conditions under which the Work is to be performed and correlated personal observations with requirements of the Contract Documents. (see Supplementary Conditions)

§ 3.2.2 Because the Contract Documents are complementary, the Contractor shall, before starting each portion of the Work, carefully study and compare the various Contract Documents relative to that portion of the Work, as well as the information furnished by the Owner pursuant to Section 2.2.3, shall take field measurements of any existing conditions related to that portion of the Work, and shall observe any conditions at the site affecting it. These obligations are for the purpose of facilitating coordination and construction by the Contractor and are not for the purpose of discovering errors, omissions, or inconsistencies in the Contract Documents; however, the Contractor shall

promptly report to the Architect any errors, inconsistencies or omissions discovered by or made known to the Contractor as a request for information in such form as the Architect may require. It is recognized that the Contractor's review is made in the Contractor's capacity as a contractor and not as a licensed design professional, unless otherwise specifically provided in the Contract Documents.

§ 3.2.3 The Contractor is not required to ascertain that the Contract Documents are in accordance with applicable laws, statutes, ordinances, codes, rules and regulations, or lawful orders of public authorities, but the Contractor shall promptly report to the Architect any nonconformity discovered by or made known to the Contractor as a request for information in such form as the Architect may require.

§ 3.2.4 If the Contractor believes that additional cost or time is involved because of clarifications or instructions the Architect issues in response to the Contractor's notices or requests for information pursuant to Sections 3.2.2 or 3.2.3, the Contractor shall make Claims as provided in Article 15. If the Contractor fails to perform the obligations of Sections 3.2.2 or 3.2.3, the Contractor shall pay such costs and damages to the Owner as would have been avoided if the Contractor had performed such obligations. If the Contractor performs those obligations, the Contractor shall not be liable to the Owner or Architect for damages resulting from errors, inconsistencies or omissions in the Contract Documents, for differences between field measurements or conditions and the Contract Documents, or for nonconformities of the Contract Documents to applicable laws, statutes, ordinances, codes, rules and regulations, and lawful orders of public authorities.

§ 3.2.5 (see Supplementary Conditions)

§ 3.3 SUPERVISION AND CONSTRUCTION PROCEDURES

§ 3.3.1 The Contractor shall supervise and direct the Work, using the Contractor's best skill and attention. The Contractor shall be solely responsible for, and have control over, construction means, methods, techniques, sequences and procedures and for coordinating all portions of the Work under the Contract, unless the Contract Documents give other specific instructions concerning these matters. If the Contract Documents give specific instructions concerning construction means, methods, techniques, sequences or procedures, the Contractor shall evaluate the jobsite safety thereof and, except as stated below, shall be fully and solely responsible for the jobsite safety of such means, methods, techniques, sequences or procedures. If the Contractor determines that such means, methods, techniques, sequences or procedures may not be safe, the Contractor shall give timely written notice to the Owner and Architect and shall not proceed with that portion of the Work without further written instructions from the Architect. If the Contractor is then instructed to proceed with the required means, methods, techniques, sequences or procedures without acceptance of changes proposed by the Contractor, the Owner shall be solely responsible for any loss or damage arising solely from those Owner-required means, methods, techniques, sequences or procedures.

§ 3.3.2 The Contractor shall be responsible to the Owner for acts and omissions of the Contractor's employees, Subcontractors and their agents and employees, and other persons or entities performing portions of the Work for, or on behalf of, the Contractor or any of its Subcontractors.

§ 3.3.3 The Contractor shall be responsible for inspection of portions of Work already performed to determine that such portions are in proper condition to receive subsequent Work.

§ 3.3.4 (see Supplementary Conditions)

§ 3.4 LABOR AND MATERIALS

§ 3.4.1 Unless otherwise provided in the Contract Documents, the Contractor shall provide and pay for labor, materials, equipment, tools, construction equipment and machinery, water, heat, utilities, transportation, and other facilities and services necessary for proper execution and completion of the Work, whether temporary or permanent and whether or not incorporated or to be incorporated in the Work.

§ 3.4.2 Except in the case of minor changes in the Work authorized by the Architect in accordance with Sections 3.12.8 or 7.4, the Contractor may make substitutions only with the consent of the Owner, after evaluation by the Architect and in accordance with a Change Order or Construction Change Directive.

§ 3.4.3 The Contractor shall enforce strict discipline and good order among the Contractor's employees and other persons carrying out the Work. The Contractor shall not permit employment of unfit persons or persons not properly skilled in tasks assigned to them.

§ 3.5 WARRANTY

The Contractor warrants to the Owner and Architect that materials and equipment furnished under the Contract will be of good quality and new unless the Contract Documents require or permit otherwise. The Contractor further warrants that the Work will conform to the requirements of the Contract Documents and will be free from defects, except for those inherent in the quality of the Work the Contract Documents require or permit. Work, materials, or equipment not conforming to these requirements may be considered defective. The Contractor's warranty excludes remedy for damage or defect caused by abuse, alterations to the Work not executed by the Contractor, improper or insufficient maintenance, improper operation, or normal wear and tear and normal usage. If required by the Architect, the Contractor shall furnish satisfactory evidence as to the kind and quality of materials and equipment. (see Supplementary Conditions)

§ 3.6 TAXES

(see Supplementary Conditions) The Contractor shall pay sales, consumer, use and similar taxes for the Work provided by the Contractor that are legally enacted when bids are received or negotiations concluded, whether or not yet effective or merely scheduled to go into effect.

§ 3.7 PERMITS, FEES, NOTICES AND COMPLIANCE WITH LAWS

§ 3.7.1 Unless otherwise provided in the Contract Documents, the Contractor shall secure and pay for the building permit as well as for other permits, fees, licenses, and inspections by government agencies necessary for proper execution and completion of the Work that are customarily secured after execution of the Contract and legally required at the time bids are received or negotiations concluded.

§ 3.7.1.1 (see Supplementary Conditions)

§ 3.7.2 The Contractor shall comply with and give notices required by applicable laws, statutes, ordinances, codes, rules and regulations, and lawful orders of public authorities applicable to performance of the Work.

§ 3.7.3 If the Contractor performs Work knowing it to be contrary to applicable laws, statutes, ordinances, codes, rules and regulations, or lawful orders of public authorities, the Contractor shall assume appropriate responsibility for such Work and shall bear the costs attributable to correction.

§ 3.7.4 **Concealed or Unknown Conditions.** If the Contractor encounters conditions at the site that are (1) subsurface or otherwise concealed physical conditions that differ materially from those indicated in the Contract Documents or (2) unknown physical conditions of an unusual nature, that differ materially from those ordinarily found to exist and generally recognized as inherent in construction activities of the character provided for in the Contract Documents, the Contractor shall promptly provide notice to the Owner and the Architect before conditions are disturbed and in no event later than 21 days after first observance of the conditions. The Architect will promptly investigate such conditions and, if the Architect determines that they differ materially and cause an increase or decrease in the Contractor's cost of, or time required for, performance of any part of the Work, will recommend an equitable adjustment in the Contract Sum or Contract Time, or both. If the Architect determines that the conditions at the site are not materially different from those indicated in the Contract Documents and that no change in the terms of the Contract is justified, the Architect shall promptly notify the Owner and Contractor in writing, stating the reasons. If either party disputes the Architect's determination or recommendation, that party may proceed as provided in Article 15.

§ 3.7.5 If, in the course of the Work, the Contractor encounters human remains or recognizes the existence of burial markers, archaeological sites or wetlands not indicated in the Contract Documents, the Contractor shall immediately suspend any operations that would affect them and shall notify the Owner and Architect. Upon receipt of such notice, the Owner shall promptly take any action necessary to obtain governmental authorization required to resume the operations. The Contractor shall continue to suspend such operations until otherwise instructed by the Owner but shall continue with all other operations that do not affect those remains or features. Requests for adjustments in the Contract Sum and Contract Time arising from the existence of such remains or features may be made as provided in Article 15.

§ 3.8 ALLOWANCES
§ 3.8.1 . (see Supplementary Conditions)

(Paragraphs deleted)
§ 3.9 SUPERINTENDENT
§ 3.9.1 The Contractor shall employ a competent superintendent and necessary assistants who shall be in atrendance at the Project site during performance of the Work. The superintendent shall represent the Contractor, and communications given to the superintendent shall bc as binding as if given to the Contractor. (see Supplementary Conditions)

§ 3.9.2 The Contractor, as soon as practicable after award of the Contract, shall furnish in writing to the Owner through the Architect the name and qualifications of a proposed superintendent. The Architect may reply within 14 days to the Contractor in writing stating (1) whether the Owner or the Architect has reasonable objection to the proposed superintendent or (2) that the Architect requires additional time to review. Failure of the Architect to reply within the 14 day period shall constitute notice of no reasonable objection.

§ 3.9.3 The Contractor shall not employ a proposed superintendent to whom the Owner or Architect has made reasonable and timely objection. The Contractor shall not change the superintendent without the Owner's consent, which sball not unreasonably be withheld or delayed.

§ 3.10 CONTRACTOR'S CONSTRUCTION SCHEDULES
§ 3.10.1 The Contractor, promptly after being awarded the Contraet, shall prepare and submit for the Owner's and Architect's information a Contractor's construction schedule for the Work. The schedule shall not exceed time limits current under the Contract Documents, shall be revised at appropriate intervals as required by the conditions of the Work and Project, shall be related to the entire Project to the extent required by the Contract Documents, and shall provide for expeditious and practicable execution of the Work. (see Supplementary Conditions)

§ 3.10.2 The Contractor shall prepare a submittal schedule, promptly after being awarded the Contract and thereafter as necessary to maintain a current submittal schedule, and shall submit the schedule(s) for the Architect's approval. The Architect's approval shall not unreasonably be delayed or withheld. The submitral schedule shall (1) be coordinated with the Contractor's construction schedule, and (2) allow the Architect reasonable time to review submittals. If the Contractor fails to submit a submitral schedule, the Contractor shall not be entitled to any increase in Contract Sum or extension of Contract Time based on the time required for review of submitrals.

§ 3.10.3 The Contractor shall perform the Work in general accordance with the most recent schedules submitted to the Owner and Architect. (see Supplementary Conditions)

§ 3.10.4 (see Supplementary Conditions)

§ 3.11 DOCUMENTS AND SAMPLES AT THE SITE
The Contractor shall maintain at the site for the Owner one copy of the Drawings, Specifications, Addenda, Change Orders and other Modifications, in good order and marked currently to indicate field changes and selections made during construction, and one copy of approved Shop Drawings, Product Data, Samples and similar required submittals. These shall be available to the Architect and shall be delivered to the Architect for submittal to the Owner upon completion of the Work as a record of the Work as constructed.

§ 3.12 SHOP DRAWINGS, PRODUCT DATA AND SAMPLES
§ 3.12.1 Shop Drawings are drawings, diagrams, schedules and other data specially prepared for the Work by the Contractor or a Subcontractor, Sub-subcontractor, manufacturer, supplier or distributor to illustrate some portion of the Work.

§ 3.12.2 Product Data are illustrations, standard schedules, performance charts, instructions, brochures, diagrams and other information furnished by the Contractor to illustrate materials or equipment for some portion of the Work.

§ 3.12.3 Samples are physical examples that illustrate materials, equipment or workmanship and establish standards by which the Work will be judged.

§ **3.12.4** Shop Drawings, Product Data, Samples and similar submittals are not Contract Documents. Their purpose is to demonstrate the way by which the Contractor proposes to conform to the information given and the design concept expressed in the Contract Documents for those portions of the Work for which the Contract Documents require submittals. Review by the Architect is subject to the limitations of Section 4.2.7. Informational submittals upon which the Architect is not expected to take responsive action may be so identified in the Contract Documents. Submittals that are not required by the Contract Documents may be returned by the Architect without action.

§ **3.12.5** The Contractor shall review for compliance with the Contract Documents, approve and submit to the Architect Shop Drawings, Product Data, Samples and similar submittals required by the Contract Documents in accordance witb the submittal schedule approved by the Architect or, in the absence of an approved submittal schedule, with reasonable promptness and in such sequence as to cause no delay in the Work or in the activities of the Owner or of separate contractors.

§ **3.12.6** By submitting Shop Drawings, Product Data, Samples and similar submittals, the Contractor represents to the Owner and Architect that the Contractor has (1) reviewed and approved them, (2) determined and verified materials, field measurements and field construction criteria related thereto, or will do so and (3) checked and coordinated the information contained within such submittals with the requirements of the Work and of the Contract Documents.

§ **3.12.7** The Contractor shall perform no portion of the Work for which the Contract Documents require submittal and review of Shop Drawings, Product Data, Samples or similar submittals until the respective submittal has been approved by the Architect. (see Supplementary Conditions)

§ **3.12.8** The Work shall be in accordance with approved submittals except that the Contractor shall not be relieved of responsibility for deviations from requirements of the Contract Documents by the Architect's approval of Shop Drawings, Product Data, Samples or similar submittals unless the Contractor has specifically informed the Architect in writing of such deviation at the time of submittal and (1) the Architect has given written approval to the specific deviation as a minor change in the Work, or (2) a Change Order or Construction Change Directive has been issued authorizing the deviation. The Contractor shall not be relieved of responsibility for errors or omissions in Shop Drawings, Product Data, Samples or similar submittals by the Architect's approval thereof.

§ **3.12.9** The Contractor shall direct specifie attention, in writing or on resubmitted Shop Drawings, Product Data, Samples or similar submittals, to revisions other than those requested by the Architect on previous submittals. In the absence of such written notice, the Architect's approval of a resubmission shall not apply to such revisions.

§ **3.12.10** The Contractor shall not be required to provide professional services that constitute the practice of architecture or engineering unless such services are specifically required by the Contract Documents for a portion of the Work or unless the Contractor needs to provide such services in order to carry out the Contractor's responsibilities for construction means, methods, techniques, sequences and procedures. The Contractor shall not be required to provide professional services in violation of applicable law. If professional design services or certifications by a design professional related to systems, materials or equipment are specifically required of the Contractor by the Contract Documents, the Owner and the Architect will specify all performance and design criteria that such services must satisfy. The Contractor shall cause such services or certifications to be provided by a properly licensed design professional, whose signature and seal shall appear on all drawings, calculations, specifications, certifications, Shop Drawings and other submittals prepared by such professional. Shop Drawings and other submittals related to the Work designed or certified by such professional, if prepared by others, shall bear such professional's written approval when submitted to the Architect. The Owner and the Architect shall be entitled to rely upon the adequacy, accuracy and completeness of the services, certifications and approvals performed or provided by such design professionals, provided the Owner and Architect have specified to the Contractor all performance and design criteria that such services must satisfy. Pursuant to this Section 3.12.10, the Architect will review, approve or take other appropriate action on submittals only for the limited purpose of checking for conformance with information given and the design concept expressed in the Contract Documents. The Contractor shall not be responsible for the adequacy of the performance and design criteria specified in the Contract Documents.

§ 3.13 USE OF SITE
The Contractor shall confine operations at the site to areas permitted by applicable laws, statutes, ordinances, codes, rules and regulations, and lawful orders of public authorities and the Contract Documents and shall not unreasonably encumber the site with materials or equipment.

§ 3.13.1, § 3.13.2 & § 3.13.3 (see Supplementary Conditions)

§ 3.14 CUTTING AND PATCHING
§ 3.14.1 The Contractor shall be responsible for cutting, fitting or patching required to complete the Work or to make its parts fit together properly. All areas requiring cutting, fitting and patching shall be restored to the condition existing prior to the cutting, fitting and patching, unless otherwise required by the Contract Documents.

§ 3.14.2 The Contractor shall not damage or endanger a portion of the Work or fully or partially completed construction of the Owner or separate contractors by cutting, patching or otherwise altering such construction, or by excavation. The Contractor shall not cut or otherwise alter such construction by the Owner or a separate contractor except with written consent of the Owner and of such separate contractor; such consent shall not be unreasonably withheld. The Contractor shall not unreasonably withhold from the Owner or a separate contractor the Contractor's consent to cutting or otherwise altering the Work.

§ 3.15 CLEANING UP
§ 3.15.1 The Contractor shall keep the premises and surrounding area free from accumulation of waste materials or rubbish caused by operations under the Contract. At completion of the Work, the Contractor shall remove waste materials, rubbish, the Contractor's tools, construction equipment, machinery and surplus materials from and about the Project.

§ 3.15.2 If the Contractor fails to clean up as provided in the Contract Documents, the Owner may do so and Owner shall be entitled to reimbursement from the Contractor.

§ 3.16 ACCESS TO WORK
The Contractor shall provide the Owner and Architect access to the Work in preparation and progress wherever located.

§ 3.17 ROYALTIES, PATENTS AND COPYRIGHTS
The Contractor shall pay all royalties and license fees. The Contractor shall defend suits or claims for infringement of copyrights and patent rights and shall hold the Owner and Architect harmless from loss on account thereof, but shall not be responsible for such defense or loss when a particular design, process or product of a particular manufacturer or manufacturers is required by the Contract Documents, or where the copyright violations are contained in Drawings, Specifications or other documents prepared by the Owner or Architect. However, if the Contractor has reason to believe that the required design, process or product is an infringement of a copyright or a patent, the Contractor shall be responsible for such loss unless such information is promptly furnished to the Architect.

§ 3.18 INDEMNIFICATION
§ 3.18.1 To the fullest extent permitted by law the Contractor shall indemnify and hold harmless the Owner, Architect, Architect's consultants, and agents and employees of any of them from and against claims, damages, losses and expenses, including but not limited to attorneys' fees, arising out of or resulting from performance of the Work, provided that such claim, damage, loss or expense is attributable to bodily injury, sickness, disease or death, or to injury to or destruction of tangible property (other than the Work itself), but only to the extent caused by the negligent acts or omissions of the Contractor, a Subcontractor, anyone directly or indirectly employed by them or anyone for whose acts they may be liable, regardless of whether or not such claim, damage, loss or expense is caused in part by a party indemnified hereunder. Such obligation shall not be construed to negate, abridge, or reduce other rights or obligations of indemnity that would otherwise exist as to a party or person described in this Section 3.18.

§ 3.18.2 In claims against any person or entity indemnified under this Section 3.18 by an employee of the Contractor, a Subcontractor, anyone directly or indirectly employed by them or anyone for whose acts they may be liable, the indemnification obligation under Section 3.18.1 shall not be limited by a limitation on amount or type of damages, compensation or benefits payable by or for the Contractor or a Subcontractor under workers' compensation acts, disability benefit acts or other employee benefit acts.

§ 3.19, § 3.20, § 3.21 & § 3.22 (see Supplementary Conditions)

ARTICLE 4 ARCHITECT

§ 4.1 GENERAL

§ 4.1.1 The Owner shall retain an architect lawfully licensed to practice architecture or an entity lawfully practicing architecture in the jurisdiction where the Project is located. That person or entity is identified as the Architect in the Agreement and is referred to throughout the Contract Documents as if singular in number. (see Supplementary Conditions)

§ 4.1.2 Duties, responsibilities and limitations of authority of the Architect as set forth in the Contract Documents shall not be restricted, modified or extended without written consent of the Owner, Contractor and Architect. Consent shall not be unreasonably withheld.

§ 4.1.3 If the employment of the Architect is terminated, the Owner shall employ a successor architect as to whom the Contractor has no reasonable objection and whose status under the Contract Documents shall be that of the Architect.

§ 4.2 ADMINISTRATION OF THE CONTRACT

§ 4.2.1 The Architect will provide administration of the Contract as described in the Contract Documents and will be an Owner's representative during construction until expiration of (1) year correction period. (see Supplementary Conditions) The Architect will have authority to act on behalf of the Owner only to the extent provided in the Contract Documents.

§ 4.2.2 The Architect will visit the site at intervals appropriate to the stage of construction, or as otherwise agreed with the Owner, to become generally familiar with the progress and quality of the portion of the Work completed, and to determine in general if the Work observed is being performed in a manner indicating that the Work, when fully completed, will be in accordance with the Contract Documents. However, the Architect will not be required to make exhaustive or continuous on-site inspections to check the quality or quantity of the Work. The Architect will not have control over, charge of, or responsibility for, the construction means, methods, techniques, sequences or procedures, or for the safety precautions and programs in connection with the Work, since these are solely the Contractor's rights and responsibilities under the Contract Documents, except as provided in Section 3.3.1.

§ 4.2.3 On the basis of the site visits, the Architect will keep the Owner reasonably informed about the progress and quality of the portion of the Work completed, and report to the Owner (1) known deviations from the Contract Documents and from the most recent construction schedule submitted by the Contractor, and (2) defects and deficiencies observed in the Work. The Architect will not be responsible for the Contractor's failure to perform the Work in accordance with the requirements of the Contract Documents. The Architect will not have control over or charge of and will not be responsible for acts or omissions of the Contractor, Subcontractors, or their agents or employees, or any other persons or entities performing portions of the Work.

§ 4.2.4 COMMUNICATIONS FACILITATING CONTRACT ADMINISTRATION

Except as otherwise provided in the Contract Documents or when direct communications have been specially authorized, the Owner and Contractor shall endeavor to communicate with each other through the Architect about matters arising out of or relating to the Contract. Communications by and with the Architect's consultants shall be through the Architect. Communications by and with Subcontractors and material suppliers shall be through the Contractor. Communications by and with separate contractors shall be through the Owner.

§ 4.2.5 Based on the Architect's evaluations of the Contractor's Applications for Payment, the Architect will review and certify the amounts due the Contractor and will issue Certificates for Payment in such amounts.

§ 4.2.6 The Architect has authority to reject Work that does not conform to the Contract Documents. Whenever the Architect considers it necessary or advisable, the Architect will have authority to require inspection or testing of the Work in accordance with Sections 13.5.2 and 13.5.3, whether or not such Work is fabricated, installed or completed. However, neither this authority of the Architect nor a decision made in good faith either to exercise or not to exercise such authority shall give rise to a duty or responsibility of the Architect to the Contractor, Subcontractors, material and equipment suppliers, their agents or employees, or other persons or entities performing portions of the Work.

§ 4.2.7 The Architect will review and approve, or take other appropriate action upon, the Contractor's submittals such as Shop Drawings, Product Data and Samples, but only for the limited purpose of checking for conformance with information given and the design concept expressed in the Contract Documents. The Architect's action will be taken in accordance with the submittal schedule approved by the Architect or, in the absence of an approved submittal schedule, with reasonable promptness while allowing sufficient time in the Architect's professional judgment to permit adequate review. Review of such submittals is not conducted for the purpose of determining the accuracy and completeness of other details such as dimensions and quantities, or for substantiating instructions for installation or performance of equipment or systems, all of which remain the responsibility of the Contractor as required by the Contract Documents. The Architect's review of the Contractor's submittals shall not relieve the Contractor of the obligations under Sections 3.3, 3.5 and 3.12. The Architect's review shall not constitute approval of safety precautions or, unless otherwise specifically stated by the Architect, of any construction means, methods, techniques, sequences or procedures. The Architect's approval of a specific item shall not indicate approval of an assembly of which the item is a component.

§ 4.2.8 The Architect will prepare Change Orders and Construction Change Directives, and may authorize minor changes in the Work as provided in Section 7.4. The Architect will investigate and make determinations and recommendations regarding concealed and unknown conditions as provided in Section 3.7.4.

§ 4.2.9 The Architect will conduct inspections to determine the date or dates of Substantial Completion and the date of final completion; issue Certificates of Substantial Completion pursuant to Section 9.8; receive and forward to the Owner, for the Owner's review and records, written warranties and related documents required by the Contract and assembled by the Contractor pursuant to Section 9.10; and issue a final Certificate for Payment pursuant to Section 9.10.

§ 4.2.10 If the Owner and Architect agree, the Architect will provide one or more project representatives to assist in carrying out the Architect's responsibilities at the site. (see Supplementary Conditions)

§ 4.2.11 The Architect will interpret and decide matters concerning performance under, and requirements of, the Contract Documents on written request of either the Owner or Contractor. The Architect's response to such requests will be made in writing within any time limits agreed upon or otherwise with reasonable promptness.

§ 4.2.12 Interpretations and decisions of the Architect will be consistent with the intent of, and reasonably inferable from, the Contract Documents and will be in writing or in the form of drawings. When making such interpretations and decisions, the Architect will endeavor to secure faithful performance by both Owner and Contractor, will not show partiality to either and will not be liable for results of interpretations or decisions rendered in good faith.

§ 4.2.13 The Architect's decisions on matters relating to aesthetic effect will be final if consistent with the intent expressed in the Contract Documents.

§ 4.2.14 The Architect will review and respond to requests for information about the Contract Documents. The Architect's response to such requests will be made in writing within any time limits agreed upon or otherwise with reasonable promptness. If appropriate, the Architect will prepare and issue supplemental Drawings and Specifications in response to the requests for information.

ARTICLE 5 SUBCONTRACTORS

§ 5.1 DEFINITIONS

§ 5.1.1 A Subcontractor is a person or entity who has a direct contract with the Contractor to perform a portion of the Work at the site. The term "Subcontractor" is referred to throughout the Contract Documents as if singular in number and means a Subcontractor or an authorized representative of the Subcontractor. The term "Subcontractor" does not include a separate contractor or subcontractors of a separate contractor.

§ 5.1.2 A Sub-subcontractor is a person or entity who has a direct or indirect contract with a Subcontractor to perform a portion of the Work at the site. The term "Sub-subcontractor" is referred to throughout the Contract Documents as if singular in number and means a Sub-subcontractor or an authorized representative of the Sub-subcontractor.

§ 5.2 AWARD OF SUBCONTRACTS AND OTHER CONTRACTS FOR PORTIONS OF THE WORK

§ 5.2.1 (see Supplementary Conditions)

§ 5.2.2 Deleted (see Supplementary Conditions)

§ 5.2.3 If the Owner or Architect has reasonable objection to a person or entity proposed by the Contractor, the Contractor shall propose another to whom the Owner or Architect has no reasonable objection. If the proposed but rejected Subcontractor was reasonably capable of performing the Work, the Contract Sum and Contract Time shall be increased or decreased by the difference, if any, occasioned by such change, and an appropriate Change Order shall be issued before commencement of the substitute Subcontractor's Work. However, no increase in the Contract Sum or Contract Time shall be allowed for such change unless the Contractor has acted promptly and responsively in submitting names as required.

§ 5.2.4 The Contractor shall not substitute a Subcontractor, person or entity previously selected if the Owner or Architect makes reasonable objection to such substitution. (see Supplementary Conditions)

§ 5.3 SUBCONTRACTUAL RELATIONS

By appropriate agreement, written where legally required for validity, the Contractor shall require each Subcontractor, to the extent of the Work to be performed by the Subcontractor, to be bound to the Contractor by terms of the Contract Documents, and to assume toward the Contractor all the obligations and responsibilities, including the responsibility for safety of the Subcontractor's Work, which the Contractor, by these Documents, assumes toward the Owner and Architect. Each subcontract agreement shall preserve and protect the rights of the Owner and Architect under the Contract Documents with respect to the Work to be performed by the Subcontractor so that subcontracting thereof will not prejudice such rights, and shall allow to the Subcontractor, unless specifically provided otherwise in the subcontract agreement, the benefit of all rights, remedies and redress against the Contractor that the Contractor, by the Contract Documents, has against the Owner. Where appropriate, the Contractor shall require each Subcontractor to enter into similar agreements with Sub-subcontractors. The Contractor shall make available to each proposed Subcontractor, prior to the execution of the subcontract agreement, copies of the Contract Documents to which the Subcontractor will be bound, and, upon written request of the Subcontractor, identify to the Subcontractor terms and conditions of the proposed subcontract agreement that may be at variance with the Contract Documents. Subcontractors will similarly make copies of applicable portions of such documents available to their respective proposed Sub-subcontractors.

§ 5.4 CONTINGENT ASSIGNMENT OF SUBCONTRACTS

§ 5.4.1 Each subcontract agreement for a portion of the Work is assigned by the Contractor to the Owner, provided that

.1 assignment is effective only after termination of the Contract by the Owner for cause pursuant to Section 14.2 and only for those subcontract agreements that the Owner accepts by notifying the Subcontractor and Contractor in writing; and

.2 assignment is subject to the prior rights of the surety, if any, obligated under bond relating to the Contract.

When the Owner accepts the assignment of a subcontract agreement, the Owner assumes the Contractor's rights and obligations under the subcontract.

§ 5.4.2 Upon such assignment, if the Work has been suspended for more than 30 days, the Subcontractor's compensation shall be equitably adjusted for increases in cost resulting from the suspension.

§ 5.4.3 Upon such assignment to the Owner under this Section 5.4, the Owner may further assign the subcontract to a successor contractor or other entity. If the Owner assigns the subcontract to a successor contractor or other entity, the Owner shall nevertheless remain legally responsible for all of the successor contractor's obligations under the subcontract.

ARTICLE 6 CONSTRUCTION BY OWNER OR BY SEPARATE CONTRACTORS

§ 6.1 OWNER'S RIGHT TO PERFORM CONSTRUCTION AND TO AWARD SEPARATE CONTRACTS

§ 6.1.1 The Owner reserves the right to perform construction or operations related to the Project with the Owner's own forces, and to award separate contracts in connection with other portions of the Project or other construction or operations on the site under Conditions of the Contract identical or substantially similar to these including those portions related to insurance and waiver of subrogation. If the Contractor claims that delay or additional cost is involved because of such action by the Owner, the Contractor shall make such Claim as provided in Article 15.

§ **6.1.2** When separate contracts are awarded for different portions of the Project or other construction or operations on the site, the term "Contractor" in the Contract Documents in each case shall mean the Contractor who executes each separate Owner-Contractor Agreement.

§ **6.1.3** The Owner shall provide for coordination of the activities of the Owner's own forces and of each separate contractor with the Work of the Contractor, who shall cooperate with them. The Contractor shall participate with other separate contractors and the Owner in reviewing their construction schedules. The Contractor shall make any revisions to the construction schedule deemed necessary after a joint review and mutual agreement. The construction schedules shall then constitute the schedules to be used by the Contractor, separate contractors and the Owner until subsequently revised.

§ **6.1.4** Unless otherwise provided in the Contract Documents, when the Owner performs construction or operations related to the Project with the Owner's own forces, the Owner shall be deemed to be subject to the same obligations and to have the same rights that apply to the Contractor under the Conditions of the Contract, including, without excluding others, those stated in Article 3, this Article 6 and Articles 10, 11 and 12.

§ 6.2 MUTUAL RESPONSIBILITY

§ **6.2.1** The Contractor shall afford the Owner and separate contractors reasonable opportunity for introduction and storage of their materials and equipment and performance of their activities, and shall connect and coordinate the Contractor's construction and operations with theirs as required by the Contract Documents.

§ **6.2.2** If part of the Contractor's Work depends for proper execution or results upon construction or operations by the Owner or a separate contractor, the Contractor shall, prior to proceeding with that portion of the Work, promptly report to the Architect apparent discrepancies or defects in such other construction that would render it unsuitable for such proper execution and results. Failure of the Contractor so to report shall constitute an acknowledgment that the Owner's or separate contractor's completed or partially completed construction is fit and proper to receive the Contractor's Work, except as to defects not then reasonably discoverable.

§ **6.2.3** The Contractor shall reimburse the Owner for costs the Owner incurs that are payable to a separate contractor because of the Contractor's delays, improperly timed activities or defective construction. The Owner shall be responsible to the Contractor for costs the Contractor incurs because of a separate contractor's delays, improperly timed activities, damage to the Work or defective construction.

§ **6.2.4** The Contractor shall promptly remedy damage the Contractor wrongfully causes to completed or partially completed construction or to property of the Owner or separate contractors as provided in Section 10.2.5.

§ **6.2.5** The Owner and each separate contractor shall have the same responsibilities for cutting and patching as are described for the Contractor in Section 3.14.

§ 6.3 OWNER'S RIGHT TO CLEAN UP

If a dispute arises among the Contractor, separate contractors and the Owner as to the responsibility under their respective contracts for maintaining the premises and surrounding area free from waste materials and rubbish, the Owner may clean up and the Architect will allocate the cost among those responsible.

ARTICLE 7 CHANGES IN THE WORK

§ 7.1 GENERAL

§ **7.1.1** Changes in the Work may be accomplished after execution of the Contract, and without invalidating the Contract, by Change Order, Construction Change Directive or order for a minor change in the Work, subject to the limitations stated in this Article 7 and elsewhere in the Contract Documents.

§ **7.1.2** A Change Order shall be based upon agreement among the Owner, Contractor and Architect; a Construction Change Directive requires agreement by the Owner and Architect and may or may not be agreed to by the Contractor; an order for a minor change in the Work may be issued by the Architect alone.

§ 7.1.3 Changes in the Work shall be performed under applicable provisions of the Contract Documents, and the Contractor shall proceed promptly, unless otherwise provided in the Change Order, Construction Change Directive or order for a minor change in the Work. (see Supplementary Conditions)

§ 7.2 CHANGE ORDERS

§ 7.2.1 A Change Order is a written instrument prepared by the Architect and signed by the Owner, Contractor and Architect stating their agreement upon all of the following:

.1 The change in the Work;
.2 The amount of the adjustment, if any, in the Contract Sum; and
.3 The extent of the adjustment, if any, in the Contract Time.
.4 (see Supplementary Conditions)

§ 7.2.2, § 7.2.3 & § 7.2.4 (see Supplementary Conditions)

§ 7.3 CONSTRUCTION CHANGE DIRECTIVES

§ 7.3.1 A Construction Change Directive is a written order prepared by the Architect and signed by the Owner and Architect, directing a change in the Work prior to agreement on adjustment, if any, in the Contract Sum or Contract Time, or both. The Owner may by Construction Change Directive, without invalidating the Contract, order changes in the Work within the general scope of the Contract consisting of additions, deletions or other revisions, the Contract Sum and Contract Time being adjusted accordingly.

§ 7.3.2 A Construction Change Directive shall be used in the absence of total agreement on the terms of a Change Order.

§ 7.3.3 If the Construction Change Directive provides for an adjustment to the Contract Sum, the adjustment shall be based on one of the following methods:

.1 Mutual acceptance of a lump sum properly itemized and supported by sufficient substantiating data to permit evaluation;
.2 Unit prices stated in the Contract Documents or subsequently agreed upon;
.3 Cost to be determined in a manner agreed upon by the parties and a mutually acceptable fixed or percentage fee; or
.4 As provided in Section 7.3.7.

§ 7.3.4 If unit prices are stated in the Contract Documents or subsequently agreed upon, and if quantities originally contemplated are materially changed in a proposed Change Order or Construction Change Directive so that application of such unit prices to quantities of Work proposed will cause substantial inequity to the Owner or Contractor, the applicable unit prices shall be equitably adjusted.

§ 7.3.5 Upon receipt of a Construction Change Directive, the Contractor shall promptly proceed with the change in the Work involved and advise the Architect of the Contractor's agreement or disagreement with the method, if any, provided in the Construction Change Directive for determining the proposed adjustment in the Contract Sum or Contract Time.

§ 7.3.6 A Construction Change Directive signed by the Contractor indicates the Contractor's agreement therewith, including adjustment in Contract Sum and Contract Time or the method for determining them. Such agreement shall be effective immediately and shall be recorded as a Change Order.

§ 7.3.7 If the Contractor does not respond promptly or disagrees with the method for adjustment in the Contract Sum, the Architect shall determine the method and the adjustment on the basis of reasonable expenditures and savings of those performing the Work attributable to the change, including, in case of an increase in the Contract Sum, an amount for overhead and profit as set forth in section 7.3.7.6 below (see Supplementary Conditions). In such case, and also under Section 7.3.3.3, the Contractor shall keep and present, in such form as the Architect may prescribe, an itemized accounting together with appropriate supporting data. Unless otherwise provided in the Contract Documents, costs for the purposes of this Section 7.3.7 shall be limited to the following:

.1 Costs of labor, including social security, old age and unemployment insurance, fringe benefits required by agreement or custom, and workers' compensation insurance;

.2 Costs of materials, supplies and equipment, including cost of transportation, whether incorporated or consumed;
.3 Rental costs of machinery and equipment, exclusive of hand tools, whether rented from the Contractor or others;
.4 Costs of premiums for all bonds and insurance, permit fees, and sales, use or similar taxes related to the Work; and
.5 Additional costs of supervision and field office personnel directly attributable to the change.
.6 (see Supplementary Conditions)

§ 7.3.8 The amount of credit to be allowed by the Contractor to the Owner for a deletion or change that results in a net decrease in the Contract Sum shall be actual net cost as confirmed by the Architect. When both additions and credits covering related Work or substitutions are involved in a change, the allowance for overhead and profit shall be figured on the basis of net increase, if any, with respect to that change.

§ 7.3.9 Pending final determination of the total cost of a Construction Change Directive to the Owner, the Contractor may request payment for Work completed under the Construction Change Directive in Applications for Payment. The Architect will make an interim determination for purposes of monthly certification for payment for those costs and certify for payment the amount that the Architect determines, in the Architect's professional judgment, to be reasonably justified. The Architect's interim determination of cost shall adjust the Contract Sum on the same basis as a Change Order, subject to the right of either party to disagree and assert a Claim in accordance with Article 15.

§ 7.3.10 When the Owner and Contractor agree with a determination made by the Architect concerning the adjustments in the Contract Sum and Contract Time, or otherwise reach agreement upon the adjustments, such agreement shall be effective immediately and the Architect will prepare a Change Order. Change Orders may be issued for all or any part of a Construction Change Directive.

§ 7.3.11 & § 7.3.12 (see Supplementary Conditions)

§ 7.4 MINOR CHANGES IN THE WORK
The Architect has authority to order minor changes in the Work not involving adjustment in the Contract Sum or extension of the Contract Time and not inconsistent with the intent of the Contract Documents. Such changes will be effected by written order signed by the Architect and shall be binding on the Owner and Contractor.

ARTICLE 8 TIME
§ 8.1 DEFINITIONS
§ 8.1.1 Unless otherwise provided, Contract Time is the period of time, including authorized adjustments, allotted in the Contract Documents for Substantial Completion of the Work.

§ 8.1.2 The date of commencement of the Work is the date established in the Agreement.

§ 8.1.3 The date of Substantial Completion is the date certified by the Architect in accordance with Section 9.8.

§ 8.1.4 The term "day" as used in the Contract Documents shall mean calendar day unless otherwise specifically defined.

§ 8.2 PROGRESS AND COMPLETION
§ 8.2.1 Time limits stated in the Contract Documents are of the essence of the Contract. By executing the Agreement the Contractor confirms that the Contract Time is a reasonable period for performing the Work. (see Supplementary Conditions)

§ 8.2.2 The Contractor shall not knowingly, except by agreement or instruction of the Owner in writing, prematurely commence operations on the site or elsewhere prior to the effective date of insurance required by Article 11 to be furnished by the Contractor and Owner. The date of commencement of the Work shall not be changed by the effective date of such insurance.

§ 8.2.3 The Contractor shall proceed expeditiously with adequate forces and shall achieve Substantial Completion within the Contract Time.

§ 8.3 DELAYS AND EXTENSIONS OF TIME

§ 8.3.1 If the Contractor is delayed at any time in the commencement or progress of the Work by an act or neglect of the Owner or Architect, or of an employee of either, or of a separate contractor employed by the Owner; or by changes ordered in the Work; or by labor disputes, fire, unusual delay in deliveries, unavoidable casualties or other causes beyond the Contractor's control; or by delay authorized by the Owner pending litigation (see Supplementary Conditions); or by other causes that the Architect determines may justify delay, then the Contract Time shall be extended by Change Order for such reasonable time as the Architect may ….. (see Supplementary Conditions).

§ 8.3.2 Claims relating to time shall be made in accordance with applicable provisions of Article 15.

§ 8.3.3 This Section 8.3 does not preclude recovery of damages for delay by either party under other provisions of the Contract Documents.

§ 8.3.4 & **§ 8.3.5** (see Supplementary Conditions)

ARTICLE 9 PAYMENTS AND COMPLETION

§ 9.1 CONTRACT SUM

The Contract Sum is stated in the Agreement and, including authorized adjustments, is the total amount payable by the Owner to the Contractor for performance of the Work under the Contract Documents.

§ 9.2 SCHEDULE OF VALUES

(see Supplementary Conditions)

§ 9.3 APPLICATIONS FOR PAYMENT

§ 9.3.1 (see Supplementary Conditions)

§ 9.3.1.1 As provided in Section 7.3.9, such applications may include requests for payment on account of changes in the Work that have been properly authorized by Construction Change Directives, or by interim determinations of the Architect, but not yet included in Change Orders.

§ 9.3.1.2 Applications for Payment shall not include requests for payment for portions of the Work for which the Contractor does not intend to pay a Subcontractor or material supplier, unless such Work has been performed by others whom the Contractor intends to pay.

§ 9.3.2 Unless otherwise provided in the Contract Documents, payments shall be made on account of materials and equipment delivered and suitably stored at the site for subsequent incorporation in the Work. If approved in advance by the Owner, payment may similarly be made for materials and equipment suitably stored off the site at a location agreed upon in writing. Payment for materials and equipment stored on or off the site shall be conditioned upon compliance by the Contractor with procedures satisfactory to the Owner to establish the Owner's title to such materials and equipment or otherwise protect the Owner's interest, and shall include the costs of applicable insurance, storage and transportation to the site for such materials and equipment stored off the site.

§ 9.3.3 The Contractor warrants that title to all Work covered by an Application for Payment will pass to the Owner no later than the time of payment. The Contractor further warrants that upon submittal of an Application for Payment all Work for which Certificates for Payment have been previously issued and payments received from the Owner shall, to the best of the Contractor's knowledge, information and belief, be free and clear of liens, claims, security interests or encumbrances in favor of the Contractor, Subcontractors, material suppliers, or other persons or entities making a claim by reason of having provided labor, materials and equipment relating to the Work.

§ 9.4 CERTIFICATES FOR PAYMENT

§ 9.4.1 The Architect will, within seven days after receipt of the Contractor's Application for Payment, either issue to the Owner a Certificate for Payment, with a copy to the Contractor, for such amount as the Architect determines is properly due, or notify the Contractor and Owner in writing of the Architect's reasons for withholding certification in whole or in part as provided in Section 9.5.1.

§ 9.4.2 The issuance of a Certificate for Payment will constitute a representation by the Architect to the Owner, based on the Architect's evaluation of the Work and the data comprising the Application for Payment, that, to the best of the Architect's knowledge, information and belief, the Work has progressed to the point indicated and that the quality of the Work is in accordance with the Contract Documents. The foregoing representations are subject to an evaluation of the Work for conformance with the Contract Documents upon Substantial Completion, to results of subsequent tests and inspections, to correction of minor deviations from the Contract Documents prior to completion and to specific qualifications expressed by the Architect. The issuance of a Certificate for Payment will further constitute a representation that the Contractor is entitled to payment in the amount certified. However, the issuance of a Certificate for Payment will not be a representation that the Architect has (1) made exhaustive or continuous on-site inspections to check the quality or quantity of the Work, (2) reviewed construction means, methods, techniques, sequences or procedures, (3) reviewed copies of requisitions received from Subcontractors and material suppliers and other data requested by the Owner to substantiate the Contractor's right to payment, or (4) made examination to ascertain how or for what purpose the Contractor has used money previously paid on account of the Contract Sum.

§ 9.5 DECISIONS TO WITHHOLD CERTIFICATION

§ 9.5.1 The Architect may withhold a Certificate for Payment in whole or in part, to the extent reasonably necessary to protect the Owner, if in the Architect's opinion the representations to the Owner required by Section 9.4.2 cannot be made. If the Architect is unable to certify payment in the amount of the Application, the Architect will notify the Contractor and Owner as provided in Section 9.4.1. If the Contractor and Architect cannot agree on a revised amount, the Architect will promptly issue a Certificate for Payment for the amount for which the Architect is able to make such representations to the Owner. The Architect may also withhold a Certificate for Payment or, because of subsequently discovered evidence, may nullify the whole or a part of a Certificate for Payment previously issued, to such extent as may be necessary in the Architect's opinion to protect the Owner from loss for which the Contractor is responsible, including loss resulting from acts and omissions described in Section 3.3.2, because of

- **.1** defective Work not remedied;
- **.2** third party claims filed or reasonable evidence indicating probable filing of such claims unless security acceptable to the Owner is provided by the Contractor;
- **.3** failure of the Contractor to make payments properly to Subcontractors or for labor, materials or equipment;
- **.4** reasonable evidence that the Work cannot be completed for the unpaid balance of the Contract Sum;
- **.5** damage to the Owner or a separate contractor;
- **.6** reasonable evidence that the Work will not be completed within the Contract Time, and that the unpaid balance would not be adequate to cover actual or liquidated damages for the anticipated delay; or
- **.7** repeated failure to carry out the Work in accordance with the Contract Documents.
- **.8 & .9** (see Supplementary Conditions)

§ 9.5.2 When the above reasons for withholding certification are removed, certification will be made for amounts previously withheld.

§ 9.5.3 If the Architect withholds certification for payment under Section 9.5.1.3, the Owner may, at its sole option, issue joint checks to the Contractor and to any Subcontractor or material or equipment suppliers to whom the Contractor failed to make payment for Work properly performed or material or equipment suitably delivered. If the Owner makes payments by joint check, the Owner shall notify the Architect and the Architect will reflect such payment on the next Certificate for Payment.

§ 9.6 PROGRESS PAYMENTS

§ 9.6.1 After the Architect has issued a Certificate for Payment, the Owner shall make payment in the manner and within the time provided in the Contract Documents, and shall so notify the Architect.

§ 9.6.2 The Contractor shall pay each Subcontractor (see Supplementary Conditions) after receipt of payment from the Owner the amount to which the Subcontractor is entitled, reflecting percentages actually retained from payments to the Contractor on account of the Subcontractor's portion of the Work. The Contractor shall, by appropriate agreement with each Subcontractor, require each Subcontractor to make payments to Sub-subcontractors in a similar manner. (see Supplementary Conditions)

§ **9.6.3** The Architect will, on request, furnish to a Subcontractor, if practicable, information regarding percentages of completion or amounts applied for by the Contractor and action taken thereon by the Architect and Owner on account of portions of the Work done by such Subcontractor.

§ **9.6.4** The Owner has the right to request writren evidence from the Contractor that the Contractor has properly paid Subcontractors and material and equipment suppliers amounts paid by the Owner to the Contractor for subcontracted Work. If the Contractor fails to furnish such evidence within seven days, the Owner shall have the right to contact Subcontractors to ascertain whether they have been properly paid. Neither the Owner nor Architect shall have an obligation to pay or to see to the payment of money to a Subcontractor, except as may otherwise be required by law. (see Supplementary Conditions)

§ **9.6.5** Contractor payments to material and equipment suppliers shall be treated in a manner similar to that provided in Sections 9.6.2, 9.6.3 and 9.6.4.

§ **9.6.6** A Certificate for Payment, a progress payment, or partial or entire use or occupancy of the Project by the Owner shall not constitute acceptance of Work not in accordance with the Contract Documents.

§ **9.6.7** Unless the Contractor provides the Owner with a payment bond in the full penal sum of the Contract Sum, payments received by the Contractor for Work properly performed by Subcontractors and suppliers shall be held by the Contractor for those Subcontractors or suppliers who performed Work or furnished materials, or both, under contract with the Contractor for which payment was made by the Owner. Nothing contained herein shall require money to be placed in a separate account and not commingled with money of the Contractor, shall create any fiduciary liability or tort liability on the part of the Contractor for breach of trust or shall entitle any person or entity to an award of punitive damages against the Contractor for breach of the requirements of this provision.

§ **9.7** deleted (see Supplementary Conditions)

§ **9.8 SUBSTANTIAL COMPLETION** (see Supplementary Conditions)

(Paragraphs deleted)

§ **9.9 PARTIAL OCCUPANCY OR USE**

§ **9.9.1** (see Supplementary Conditions)

§ **9.9.2** Immediately prior to such partial occupancy or use, the Owner, Contractor and Architect shall jointly inspect the area to be occupied or portion of the Work to be used in order to determine and record the condition of the Work.

§ **9.9.3** Unless otherwise agreed upon, partial occupancy or use of a portion or portions of the Work shall not constitute acceptance of Work not complying with the requirements of the Contract Documents.

§ **9.10 FINAL COMPLETION AND FINAL PAYMENT**

§ **9.10.1** Upon receipt of the Contractor's written notice that the Work is ready for final inspection and acceptance and upon receipt of a final Application for Payment, the Architect will promptly make such inspection and, when the Architect finds the Work acceptable under the Contract Documents and the Contract fully performed, the Architect will promptly issue a final Certificate for Payment stating that to the best of the Architect's knowledge, information and belief, and on the basis of the Architect's on-site visits and inspections, the Work has been completed in accordance with terms and conditions of the Contract Documents and that the entire balance found to be due the Contractor and noted in the final Certificate is due and payable. ….. (see Supplementary Conditions) The Architect's final Certificate for Payment will constitute a further representation that conditions listed in Section 9.10.2 as precedent to the Contractor's being entitled to final payment have been fulfilled.

§ **9.10.2** Neither final payment nor any remaining retained percentage shall become due until the Contractor submits to the Architect (1) an affidavit that payrolls, bills for materials and equipment, and other indebtedness connected with the Work for which the Owner or the Owner's property might be responsible or encumbered (less amounts withheld by Owner) have been paid or otherwise satisfied, (2) a certificate evidencing that insurance required by the Contract Documents to remain in force after final payment is currently in effect and will not be canceled or allowed to expire until at least 30 days' prior written notice has been given to the Owner, (3) a written statement that the Contractor knows of no substantial reason that the insurance will not be renewable to cover the period required by the Contract

Documents, (4) consent of surety, if any, to final payment and (5), if required by the Owner, other data establishing payment or satisfaction of obligations, such as receipts, releases and waivers of liens, claims, security interests or encumbrances arising out of the Contract, to the extent and in such form as may be designated by the Owner. ..... (see Supplementary Conditions) If a Subcontractor refuses to furnish a release or waiver required by the Owner, the Contractor may furnish a bond satisfactory to the Owner to indemnify the Owner against such lien. If such lien remains unsatisfied after payments are made, the Contractor shall refund to the Owner all money that the Owner may be compelled to pay in discharging such lien, including all costs and reasonable attorneys' fees. (see Supplementary Conditions)

§ 9.10.3 If, after Substantial Completion of the Work, final completion thereof is materially delayed through no fault of the Contractor or by issuance of Change Orders affecting final completion, and the Architect so confirms, the Owner shall, upon application by the Contractor and certification by the Architect, and without terminating the Contract, make payment of the balance due for that portion of the Work fully completed and accepted. If the remaining balance for Work not fully completed or corrected is less than retainage stipulated in the Contract Documents, and if bonds have been furnished, the written consent of surety to payment of the balance due for that portion of the Work fully completed and accepted shall be submitted by the Contractor to the Architect prior to certification of such payment. Such payment shall be made under terms and conditions governing final payment, except that it shall not constitute a waiver of claims.

§ 9.10.4 The making of final payment shall constitute a waiver of Claims by the Owner except those arising from

- **.1** liens, Claims, security interests or encumbrances arising out of the Contract and unsettled;
- **.2** failure of the Work to comply with the requirements of the Contract Documents; or
- **.3** terms of special warranties required by the Contract Documents.

§ 9.10.5 Acceptance of final payment by the Contractor, a Subcontractor or material supplier shall constitute a waiver of claims by that payee except those previously made in writing and identified by that payee as unsettled at the time of final Application for Payment.

§ 9.11 (see Supplementary Conditions)

ARTICLE 10 PROTECTION OF PERSONS AND PROPERTY

§ 10.1 SAFETY PRECAUTIONS AND PROGRAMS

The Contractor shall be responsible for initiating, maintaining and supervising all safety precautions and programs in connection with the performance of the Contract.

§ 10.2 SAFETY OF PERSONS AND PROPERTY

§ 10.2.1 The Contractor shall take reasonable precautions for safety of, and shall provide reasonable protection to prevent damage, injury or loss to

- **.1** employees on the Work and other persons who may be affected thereby;
- **.2** the Work and materials and equipment to be incorporated therein, whether in storage on or off the site, under care, custody or control of the Contractor or the Contractor's Subcontractors or Sub-subcontractors; and
- **.3** other property at the site or adjacent thereto, such as trees, shrubs, lawns, walks, pavements, roadways, structures and utilities not designated for removal, relocation or replacement in the course of construction.
- **.4, .5 & .6** (see Supplementary Conditions)

§ 10.2.2 The Contractor shall comply with and give notices required by applicable laws, statutes, ordinances, codes, rules and regulations, and lawful orders of public authorities bearing on the health and (see Supplementary Conditions) safety of persons or property or their protection from damage, injury or loss. (see Supplementary Conditions)

§ 10.2.3 The Contractor shall erect and maintain, as required by existing conditions and performance of the Contract, reasonable safeguards for safety and protection, including posting danger signs and other warnings against hazards, promulgating safety regulations and notifying owners and users of adjacent sites and utilities.

§ 10.2.4 When use or storage of explosives or other hazardous materials or equipment or unusual methods are necessary for execution of the Work, the Contractor shall exercise utmost care and carry on such activities under supervision of properly qualified personnel.

§ 10.2.5 The Contractor shall promptly remedy damage and loss (other than damage or loss insured under property insurance required by the Contract Documents) to property referred to in Sections 10.2.1.2 and 10.2.1.3 caused in whole or in part by the Contractor, a Subcontractor, a Sub-subcontractor, or anyone directly or indirectly employed by any of them, or by anyone for whose acts they may be liable and for which the Contractor is responsible under Sections 10.2.1.2 and 10.2.1.3, except damage or loss attributable to acts or omissions of the Owner or Architect or anyone directly or indirectly employed by either of them, or by anyone for whose acts either of them may be liable, and not attributable to the fault or negligence of the Contractor. The foregoing obligations of the Contractor are in addition to the Contractor's obligations under Section 3.18.

§ 10.2.6 The Contractor shall designate a responsible member of the Contractor's organization at the site whose duty shall be the prevention of accidents. This person shall be the Contractor's superintendent unless otherwise designated by the Contractor in writing to the Owner and Architect.

§ 10.2.7 The Contractor shall not permit any part of the construction or site to be loaded so as to cause damage or create an unsafe condition.

§ 10.2.8 INJURY OR DAMAGE TO PERSON OR PROPERTY
If either party suffers injury or damage to person or property because of an act or omission of the other party, or of others for whose acts such party is legally responsible, written notice of such injury or damage, whether or not insured, shall be given to the other party within a reasonable time not exceeding 21 days after discovery. The notice shall provide sufficient detail to enable the other party to investigate the matter.

§ 10.2.9 (see Supplementary Conditions)

§ 10.3 HAZARDOUS MATERIALS
§ 10.3.1 The Contractor is responsible for compliance with any requirements included in the Contract Documents regarding hazardous materials. If the Contractor encounters a hazardous material or substance not addressed in the Contract Documents and if reasonable precautions will be inadequate to prevent foreseeable bodily injury or death to persons resulting from a material or substance, including but not limited to asbestos or polychlorinated biphenyl (PCB) or lead (see Supplementary Conditions), encountered on the site by the Contractor, the Contractor shall, upon recognizing the condition, immediately stop Work in the affected area and report the condition to the Owner and Architect in writing. (see Supplementary Conditions)

§ 10.3.2 Upon receipt of the Contractor's written notice, the Owner shall obtain the services of a licensed laboratory to verify the presence or absence of the material or substance reported by the Contractor and, in the event such material or substance is found to be present, to cause it to be rendered harmless. (see Supplementary Conditions)

§ 10.3.3 deleted (see Supplementary Conditions)

§ 10.3.4 The Owner shall not be responsible under this Section 10.3 for materials or substances the Contractor brings to the site unless such materials or substances are required by the Contract Documents. The Owner shall be responsible for materials or substances required by the Contract Documents, except to the extent of the Contractor's fault or negligence in the use and handling of such materials or substances.

§ 10.3.5 The Contractor shall indemnify the Owner for the cost and expense the Owner incurs (1) for remediation of a material or substance the Contractor brings to the site and negligently handles, or (2) where the Contractor fails to perform its obligations under Section 10.3.1, except to the extent that the cost and expense are due to the Owner's fault or negligence.

§ 10.3.6 If, without negligence on the part of the Contractor, the Contractor is held liable by a government agency for the cost of remediation of a hazardous material or substance solely by reason of performing Work as required by the Contract Documents, the Owner shall indemnify the Contractor for all cost and expense thereby incurred.

§ 10.4 EMERGENCIES
(see Supplementary Conditions)

ARTICLE 11 INSURANCE AND BONDS

§ 11.1 STANDARDIZED INSURANCE REQUIREMENTS FOR ALLAPSB CONTRACTS (see Supplementary Conditions)

§ 11.1.1 The Contractor shall purchase from and maintain in a company or companies lawfully authorized to do business in the jurisdiction in which the Project is located such insurance as will protect the Contractor from claims set forth below which may arise out of or result from the Contractor's operations and completed operations under the Contract and for which the Contractor may be legally liable, whether such operations be by the Contractor or by a Subcontractor or by anyone directly or indirectly employed by any of them, or by anyone for whose acts any of them may be liable:

- **.1** Claims under workers' compensation, disability benefit and other similar employee benefit acts that are applicable to the Work to be performed;
- **.2** Claims for damages because of bodily injury, occupational sickness or disease, or death of the Contractor's employees;
- **.3** Claims for damages because of bodily injury, sickness or disease, or death of any person other than the Contractor's employees;
- **.4** Claims for damages insured by usual personal injury liability coverage;
- **.5** Claims for damages, other than to the Work itself, because of injury to or destruction of tangible property, including loss of use resulting therefrom;
- **.6** Claims for damages because of bodily injury, death of a person or property damage arising out of ownership, maintenance or use of a motor vehicle;
- **.7** Claims for bodily injury or property damage arising out of completed operations; and
- **.8** Claims involving contractual liability insurance applicable to the Contractor's obligations under Section 3.18.

§ 11.1.2 The insurance required by Section 11.1.1 shall be written for not less than limits of liability specified in the Contract Documents or required by law, whichever coverage is greater. Coverages, whether written on an occurrence or claims-made basis, shall be maintained without interruption from the date of commencement of the Work until the date of final payment and termination of any coverage required to be maintained after final payment, and, with respect to the Contractor's completed operations coverage, until the expiration of the period for correction of Work or for such other period for maintenance of completed operations coverage as specified in the Contract Documents.

§ 11.1.2.1, § 11.1.2.2, § 11.1.2.3, & § 11.1.2.4 (See Supplementary Conditions)

§ 11.1.3 Certificates of insurance acceptable to the Owner shall be filed with the Owner prior to commencement of the Work and thereafter upon renewal or replacement of each required policy of insurance. These certificates and the insurance policies required by this Section 11.1 shall contain a provision that coverages afforded under the policies will not be canceled or allowed to expire until at least 30 days' prior written notice has been given to the Owner. An additional certificate evidencing continuation of liability coverage, including coverage for completed operations, shall be submitted with the final Application for Payment as required by Section 9.10.2 and thereafter upon renewal or replacement of such coverage until the expiration of the time required by Section 11.1.2. Information concerning reduction of coverage on account of revised limits or claims paid under the General Aggregate, or both, shall be furnished by the Contractor with reasonable promptness. (See Supplementary Conditions)

§ 11.1.4 The Contractor shall cause the commercial liability coverage required by the Contract Documents to include (1) the Owner, the Architect and the Architect's consultants as additional insureds for claims caused in whole or in part by the Contractor's negligent acts or omissions during the Contractor's operations; and (2) the Owner as an additional insured for claims caused in whole or in part by the Contractor's negligent acts or omissions during the Contractor's completed operations.
(See Supplementary Conditions)

§ 11.2 deleted (See Supplementary Conditions)

§ 11.3 PROPERTY INSURANCE (See Supplementary Conditions)

(Paragraphs deleted)

§ 11.4 PERFORMANCE BOND AND PAYMENT BOND

§ 11.4.1 The (See Supplementary Conditions) Contractor shall furnish bonds covering faithful performance of the Contract and payment of obligations arising thereunder as stipulated in bidding requirements or specifically required in the Contract Documents on the date of execution of the Contract.

§ 11.4.2 Upon the request of any person or entity appearing to be a potential beneficiary of bonds covering payment of obligations arising under the Contract, the Contractor shall promptly furnish a copy of the bonds or shall authorize a copy to be furnished.

§ 11.4.3 (See Supplementary Conditions)

§ 11.5 & § 11.6 (See Supplementary Conditions)

ARTICLE 12 UNCOVERING AND CORRECTION OF WORK

§ 12.1 UNCOVERING OF WORK

§ 12.1.1 If a portion of the Work is covered contrary to the Architect's request or to requirements specifically expressed in the Contract Documents, it must, if requested in writing by the Architect, be uncovered for the Architect's examination and be replaced at the Contractor's expense without change in the Contract Time.

§ 12.1.2 If a portion of the Work has been covered that the Architect has not specifically requested to examine prior to its being covered, the Architect may request to see such Work and it shall be uncovered by the Contractor. If such Work is in accordance with the Contract Documents, costs of uncovering and replacement shall, by appropriate Change Order, be at the Owner's expense. If such Work is not in accordance with the Contract Documents, such costs and the cost of correction shall be at the Contractor's expense unless the condition was caused by the Owner or a separate contractor in which event the Owner shall be responsible for payment of such costs.

§ 12.2 CORRECTION OF WORK

§ 12.2.1 BEFORE OR AFTER SUBSTANTIAL COMPLETION

The Contractor shall promptly correct Work rejected by the Architect or failing to conform to the requirements of the Contract Documents, whether discovered before or after Substantial Completion and whether or not fabricated, installed or completed. Costs of correcting such rejected Work, including additional testing and inspections, the cost of uncovering and replacement, and compensation for the Architect's services and expenses made necessary thereby, shall be at the Contractor's expense.

§ 12.2.2 AFTER SUBSTANTIAL COMPLETION

§ 12.2.2.1 In addition to the Contractor's obligations under Section 3.5, if, within one year after the date of Substantial Completion of the Work or designated portion thereof or after the date for commencement of warranties established under Section 9.9.1, or by terms of an applicable special warranty required by the Contract Documents, any of the Work is found to be not in accordance with the requirements of the Contract Documents, the Contractor shall correct it promptly after receipt of written notice from the Owner to do so unless the Owner has previously given the Contractor a written acceptance of such condition. The Owner shall give such notice promptly after discovery of the condition. During the one-year period for correction of Work, if the Owner fails to notify the Contractor and give the Contractor an opportunity to make the correction, the Owner waives the rights to require correction by the Contractor and to make a claim for breach of warranty. If the Contractor fails to correct nonconforming Work within a reasonable time during that period after receipt of notice from the Owner or Architect, the Owner may correct it in accordance with Section 2.4. (See Supplementary Conditions)

§ 12.2.2.2 The one-year period for correction of Work shall be extended with respect to portions of Work first performed after Substantial Completion by the period of time between Substantial Completion and the actual completion of that portion of the Work.

§ 12.2.2.3 The one-year period for correction of Work shall not be extended by corrective Work performed by the Contractor pursuant to this Section 12.2.

§ 12.2.3 The Contractor shall remove from the site portions of the Work that are not in accordance with the requirements of the Contract Documents and are neither corrected by the Contractor nor accepted by the Owner.

§ 12.2.4 The Contractor shall bear the cost of correcting destroyed or damaged construction, whether completed or partially completed, of the Owner or separate contractors caused by the Contractor's correction or removal of Work that is not in accordance with the requirements of the Contract Documents.

§ 12.2.5 Nothing contained in this Section 12.2 shall be construed to establish a period of limitation with respect to other obligations the Contractor has under the Contract Documents. Establishment of the one-year period for correction of Work as described in Section 12.2.2 relates only to the specific obligation of the Contractor to correct the Work, and has no relationship to the time within which the obligation to comply with the Contract Documents may be sought to be enforced, nor to the time within which proceedings may be commenced to establish the Contractor's liability with respect to the Contractor's obligations other than specifically to correct the Work.

§ 12.3 ACCEPTANCE OF NONCONFORMING WORK

If the Owner prefers to accept Work that is not in accordance with the requirements of the Contract Documents, the Owner may do so instead of requiring its removal and correction, in which case the Contract Sum will be reduced as appropriate and equitable. Such adjustment shall be effected whether or not final payment has been made.

ARTICLE 13 MISCELLANEOUS PROVISIONS

§ 13.1 GOVERNING LAW

The Contract shall be governed by the law of the place where the Project is located. (See Supplementary Conditions)

§ 13.2 SUCCESSORS AND ASSIGNS

§ 13.2.1 The Owner and Contractor respectively bind themselves, their partners, successors, assigns and legal representatives to covenants, agreements and obligations contained in the Contract Documents., (See Supplementary Conditions) neither party to the Contract shall assign the Contract as a whole without written consent of the other. If either party attempts to make such an assignment without such consent, that party shall nevertheless remain legally responsible for all obligations under the Contract.

§ 13.2.2 deleted (See Supplementary Conditions)

§ 13.3 WRITTEN NOTICE

Written notice shall be deemed to have been duly served if delivered in person to the individual, to a member of the firm or entity, or to an officer of the corporation for which it was intended; or if delivered at, or sent by registered or certified mail or by courier service providing proof of delivery to, the last business address known to the party giving notice.

§ 13.4 RIGHTS AND REMEDIES

§ 13.4.1 Duties and obligations imposed by the Contract Documents and rights and remedies available thereunder shall be in addition to and not a limitation of duties, obligations, rights and remedies otherwise imposed or available by law.

§ 13.4.2 No action or failure to act by the Owner, Architect or Contractor shall constitute a waiver of a right or duty afforded them under the Contract, nor shall such action or failure to act constitute approval of or acquiescence in a breach there under, except as may be specifically agreed in writing.

§ 13.4.3 (See Supplementary Conditions)

§ 13.5 TESTS AND INSPECTIONS

§ 13.5.1 Tests, inspections and approvals of portions of the Work shall be made as required by the Contract Documents and by applicable laws, statutes, ordinances, codes, rules and regulations or lawful orders of public authorities. (See Supplementary Conditions) The Contractor shall give the Architect timely notice of when and where tests and inspections are to be made so that the Architect may be present for such procedures. The Owner shall bear costs of (1) tests, inspections or approvals that do not become requirements until after bids are received or negotiations concluded, and (2) tests, inspections or approvals where building codes or applicable laws or regulations prohibit the Owner from delegating their cost to the Contractor.

§ 13.5.2 If the Architect, Owner or public authorities having jurisdiction determine that portions of the Work require additional testing, inspection or approval not included under Section 13.5.1, the Architect will, upon written authorization from the Owner, instruct the Contractor to make arrangements for such additional testing, inspection or approval by an entity acceptable to the Owner, and the Contractor shall give timely notice to the Architect of when and where tests and inspections are to be made so that the Architect may be present for such procedures. Such costs, except as provided in Section 13.5.3, shall be at the Owner's expense.

§ 13.5.3 If such procedures for testing, inspection or approval under Sections 13.5.1 and 13.5.2 reveal failure of the portions of the Work to comply with requirements established by the Contract Documents, all costs made necessary by such failure including those of repeated procedures and compensation for the Architect's services and expenses shall be at the Contractor's expense.

§ 13.5.4 Required certificates of testing, inspection or approval shall, unless otherwise required by the Contract Documents, be secured by the Contractor and promptly delivered to the Architect.

§ 13.5.5 If the Architect is to observe tests, inspections or approvals required by the Contract Documents, the Architect will do so promptly and, where practicable, at the normal place of testing.

§ 13.5.6 Tests or inspections conducted pursuant to the Contract Documents shall be made promptly to avoid unreasonable delay in the Work.

§ 13.6 deleted (See Supplementary Conditions)

§ 13.7 deleted (See Supplementary Condilions)

§ 13.8 (See Supplementary Conditions)

ARTICLE 14 TERMINATION OR SUSPENSION OF THE CONTRACT

§ 14.1 TERMINATION BY THE CONTRACTOR

§ 14.1.1 The Contractor may terminate the Contract if the Work is stopped for a period of 30 consecutive days through no act or fault of the Contractor or a Subcontractor, Sub-subcontractor or their agents or employees or any other persons or entities performing portions of the Work under direct or indirect contract with the Contractor, for any of the following reasons:

.1 Issuance of an order of a court or other public authority having jurisdiction that requires all Work to be stopped;

.2 An act of government, such as a declaration of national emergency that requires all Work to be stopped;

.3 Because the Architect has not issued a Certificate for Payment and has not notified the Contractor of the reason for withholding certification as provided in Section 9.4.1, or because the Owner has not made payment on a Certificate for Payment within the time stated in the Contract Documents; or

. deleted (See Supplementary Conditions)

§ 14.1.2 The Contractor may terminate the Contract if, through no act or fault of the Contractor or a Subcontractor, Sub-subcontractor or their agents or employees or any other persons or entities performing portions of the Work under direct or indirect contract with the Contractor, repeated suspensions, delays or interruptions of the entire Work by the Owner as described in Section 14.3 constitute in the aggregate more than 100 percent of the total number of days scheduled for completion, or 120 days in any 365-day period, whichever is less.

§ 14.1.3 If one of the reasons described in Section 14.1.1 or 14.1.2 exists, the Contractor may, upon seven days' written notice to the Owner and Architect, terminate the Contract and recover from the Owner payment for Work executed, including reasonable overhead and profit....(See Supplementary Conditions), costs incurred by reason of such termination, and damages. (See Supplementary Conditions)

§ 14.1.4 If the Work is stopped for a period of 60 consecutive days through no act or fault of the Contractor or a Subcontractor or their agents or employees or any other persons performing portions of the Work under contract with the Contractor because the Owner has repeatedly failed to fulfill the Owner's obligations under the Contract Documents with respect to matters important to the progress of the Work, the Contractor may, upon seven additional

days' written notice to the Owner and the Architect, terminate the Contract and recover from the Owner as provided in Section 14.1.3.

§ 14.2 TERMINATION BY THE OWNER FOR CAUSE

§ 14.2.1 The Owner may terminate the Contract if the Contractor

- .1 repeatedly refuses or fails to supply enough properly skilled workers or proper materials;
- .2 fails to make payment to Subcontractors for materials or labor in accordance with the respective agreements between the Contractor and the Subcontractors;
- .3 repeatedly disregards applicable laws, statutes, ordinances, codes, rules and regulations, or lawful orders of a public authority; or
- .4 otherwise is guilty of substantial breach of a provision of the Contract Documents.
- .5 (See Supplementary Conditions)

§ 14.2.2 When any of the above reasons exist, the Owner, upon certification by the Initial Decision Maker that sufficient cause exists to justify such action, may without prejudice to any other rights or remedies of the Owner and after giving the Contractor and the Contractor's surety, if any, seven days' written notice, terminate employment of the Contractor and may, subject to any prior rights of the surety:

- .1 Exclude the Contractor from the site and take possession of all materials, equipment, tools, and construction equipment and machinery thereon owned by the Contractor;
- .2 Accept assignment of subcontracts pursuant to Section 5.4; and
- .3 Finish the Work by whatever reasonable method the Owner may deem expedient. Upon written request of the Contractor, the Owner shall furnish to the Contractor a detailed accounting of the costs incurred by the Owner in finishing the Work.

§ 14.2.3 When the Owner terminates the Contract for one of the reasons stated in Section 14.2.1, the Contractor shall not be entitled to receive further payment until the Work is finished. (See Supplementary Conditions)

§ 14.2.3.1 (See Supplementary Conditions)

§ 14.2.4 If the unpaid balance of the Contract Sum exceeds costs of finishing the Work, including compensation for the Architect's services and expenses made necessary thereby, and other damages..... (See Supplementary Conditions) incurred by the Owner and not expressly waived, such excess shall be paid to the Contractor. If such costs and damages exceed the unpaid balance, the Contractor shall pay the difference to the Owner. The amount to be paid to the Contractor or Owner, as the case may be, shall be certified by the Initial Decision Maker, upon application, and this obligation for payment shall survive termination of the Contract.

§ 14.2.5 (See Supplementary Conditions)

§ 14.3 SUSPENSION BY THE OWNER FOR CONVENIENCE

§ 14.3.1 The Owner may, without cause, order the Contractor in writing to suspend, delay or interrupt the Work in whole or in part for such period of time as the Owner may determine.

§ 14.3.2 The Contract Sum and Contract Time shall be adjusted for increases in the cost and time caused by suspension, delay or interruption as described in Section 14.3.1. Adjustment of the Contract Sum shall include profit. No adjustment shall be made to the extent

- .1 that performance is, was or would have been so suspended, delayed or interrupted by another cause for which the Contractor is responsible; or
- .2 that an equitable adjustment is made or denied under another provision of the Contract.

§ 14.4 TERMINATION BY THE OWNER FOR CONVENIENCE

§ 14.4.1 The Owner may, at any time, terminate the Contract for the Owner's convenience and without cause.

§ 14.4.2 Upon receipt of written notice from the Owner of such termination for the Owner's convenience, the Contractor shall

- .1 cease operations as directed by the Owner in the notice;
- .2 take actions necessary, or that the Owner may direct, for the protection and preservation of the Work; and

Init.
/

.3 except for Work directed to be performed prior to the effective date of termination stated in the notice, terminate all existing subcontracts and purchase orders and enter into no further subcontracts and purchase orders.

§ 14.4.3 In case of such termination for the Owner's convenience, the Contractor shall be entitled to receive payment for Work executed, and costs incurred by reason of such termination, along with reasonable overhead and profit on the Work not executed.

ARTICLE 15 CLAIMS AND DISPUTES

§ 15.1 CLAIMS

§ 15.1.1 DEFINITION

A Claim is a demand or assertion by one of the parties seeking, as a matter of right, payment of money ... (See Supplementary Conditions), or other relief with respect to the terms of the Contract. The term "Claim" also includes other disputes and matters in question between the Owner and Contractor arising out of or relating to the Contract. The responsibility to substantiate Claims shall rest with the party making the Claim.

§ 15.1.2 NOTICE OF CLAIMS

Claims by either the Owner or Contractor must be initiated by written notice to the other party and to the Initial Decision Maker with a copy sent to the Architect, if the Architect is not serving as the Initial Decision Maker. Claims by either party must be initiated within 21 days after occurrence of the event giving rise to such Claim or within 21 days after the claimant first recognizes the condition giving rise to the Claim, whichever is later. (See Supplementary Conditions)

§ 15.1.3 CONTINUING CONTRACT PERFORMANCE

Pending final resolution of a Claim, except as otherwise agreed in writing or as provided in Section 9.7 and Article 14, the Contractor shall proceed diligently with performance of the Contract and the Owner shall continue to make payments in accordance with the Contract Documents. The Architect will prepare Change Orders and issue Certificates for Payment in accordance with ...(See Supplementary Conditions) .

§ 15.1.4 CLAIMS FOR ADDITIONAL COST

If the Contractor wishes to make a Claim for an increase in the Contract Sum, written notice as provided herein shall be given before proceeding to execute the Work. Prior notice is not required for Claims relating to an emergency endangering life or property arising under Section 10.4.

§ 15.1.5 CLAIMS FOR ADDITIONAL TIME

§ 15.1.5.1 If the Contractor wishes to make a Claim for an increase in the Contract Time, written notice as provided herein shall be given. (See Supplementary Conditions)

§ 15.1.5.2 (See Supplementary Conditions)

§ 15.1.5.3 (See Supplementary Conditions)

§ 15.1.6

(Paragraphs deleted)
deleted (See Supplementary Conditions)

§ 15.2 INITIAL DECISION

(See Supplementary Conditions)
§ 15.2.1 Claims, excluding those arising under Sections 10.3, 10.4, 11.3.9, and 11.3.10, shall be referred to the Initial Decision Maker for initial decision. The Architect will serve as the Initial Decision Maker. Except for those Claims excluded by this Section 15.2.1, an initial decision shall be required as a condition precedent to mediation of any Claim arising prior to the date final payment is due, unless 30 days have passed after the Claim has been referred to the Initial Decision Maker with no decision having been rendered. Unless the Initial Decision Maker and all affected parties agree, the Initial Decision Maker will not decide disputes between the Contractor and persons or entities other than the Owner.

§ 15.2.2 The Initial Decision Maker will review Claims and within ten days of the receipt of a Claim take one or more of the following actions: (1) request additional supporting data from the claimant or a response with supporting data from the other party, (2) reject the Claim in whole or in part, (3) approve the Claim, (4) suggest a compromise, or (5) advise the parties that the Initial Decision Maker is unable to resolve the Claim if the Initial Decision Maker lacks sufficient information to evaluate the merits of the Claim or if the Initial Decision Maker concludes that, in the Initial Decision Maker's sole discretion, it would be inappropriate for the Initial Decision Maker to resolve the Claim.

§ 15.2.3 In evaluating Claims, the Initial Decision Maker may, but shall not be obligated to, consult with or seek information from either party or from persons with special knowledge or expertise who may assist the Initial Decision Maker in rendering a decision.

§ 15.2.4 If the Initial Decision Maker requests a party to provide a response to a Claim or to furnish additional supporting data, such party shall respond, within ten days after receipt of such request, and shall either (1) provide a response on the requested supporting data, (2) advise the Initial Decision Maker when the response or supporting data will be furnished or (3) advise the Initial Decision Maker that no supporting data will be furnished. Upon receipt of the response or supporting data, if any, the Initial Decision Maker will either reject or approve the Claim in whole or in part.

§ 15.2.5 The Initial Decision Maker will render an initial decision approving or rejecting the Claim, or indicating that the Initial Decision Maker is unable to resolve the Claim. This initial decision shall (1) be in writing; (2) state the reasons therefor; and (3) notify the parties, of any change in the Contract Sum or Contract Time or both. The initial decision shall be final and binding on the parties but subject to mediation and, if the parties fail to resolve their dispute through mediation, to litigation (See Supplementary Conditions).

§ 15.2.6 Either party may file for mediation of an initial decision at any time. (See Supplementary Conditions)

§ 15.2.6.1 Deleted (See Supplementary Conditions)

§ 15.2.7 In the event of a Claim against the Contractor, the Owner may, but is not obligated to, notify the surety, if any, of the nature and amount of the Claim. If the Claim relates to a possibility of a Contractor's default, the Owner may, but is not obligated to, notify the surety and request the surety's assistance in resolving the controversy.

§ 15.2.8 Deleted (See Supplementary Conditions)

§ 15.3 MEDIATION
§ 15.3.1 (See Supplementary Conditions)

§ 15.3.2 (See Supplementary Conditions)

(Paragraph deleted)
§ 15.4 ARBITRATION
§ 15.4.1 Deleted (See Supplementary Conditions)

§ 15.4.1.1 Deleted (See Supplementary Conditions)

§ 15.4.2 Deleted (See Supplementary Conditions)

§ 15.4.3 Deleted (See Supplementary Conditions)

§ 15.4.4 CONSOLIDATION OR JOINDER
§ 15.4.4.1 (See Supplementary Conditions)

§ 15.4.4.2 Deleted (See Supplementary Conditions)

§ 15.4.4.3 Deleted (See Supplementary Conditions)

ARTICLE 16 (See Supplementary Conditions)

SUPPLEMENTARY CONDITIONS

These Supplementary Conditions modify, change, delete from, or add to the *General Conditions of the Contract for Construction, AIA Document A201 - 2007 Instructions* and apply to all construction projects by the Ascension Parish School Board (**APSB**) beginning July 31, 2014.

Where any Article of the General Conditions is modified or any Paragraph, Subparagraph or Clause thereof is modified or deleted by these supplements, the unaltered provisions of that Article, Paragraph, Subparagraph or Clause shall remain in effect.

Articles, Paragraphs, Subparagraphs or Clauses modified or deleted have the same numerical designation as those occurring in the General Conditions.

ARTICLE 1
GENERAL PROVISIONS

1.1 DEFINITIONS

1.1.1 THE CONTRACT DOCUMENTS

In Subparagraph 1.1.1 delete the third sentence, and add the following sentence:
The Contract Documents shall include the Bidding Documents as listed in Article 9, of the A101 – 2007 Agreement between Owner and Contractor and any modifications made thereto by addenda.

1.1.9 through 1.116

Add the following paragraphs after paragraph 1.1.8:

1.1.9 PROJECT MANUAL
The Project Manual is a volume assembled for the Work that may include bidding requirements, samples forms, Conditions of the Contract, Specifications, Drawings and Addendum issued prior to Bid Opening.

1.1.10 PRODUCT
The term "Product" includes materials, systems and equipment.

1.1.11 PROVIDE
The term "Provide" means the furnishing and installing of a product, complete in place, operating, tested and approved: and includes paying for the cost of all labor, materials, equipment, tools, construction equipment and machinery, permits, water, heat, gas, electricity, utilities, shipping, transportation, taxes and all other facilities and services necessary for the proper execution and completion of the Work, whether temporary or permanent and whether or not incorporated or to be incorporated in the Work.

1.1.12 BUILDING CODE AND CODE
The terms "building code" and "code" refer to regulations of governmental entities having jurisdiction.

1.1.13 "SHOWN," "INDICATED," "DETAILED," "NOTED," "SCHEDULED"
The terms "shown," "indicated," "detailed," "noted," "scheduled," and terms of similar import, refer to requirements contained in the Contract Documents.

1.1.14 "ACCEPTABLE," "APPROVED," "REQUIRED," AND "AS DIRECTED"
The terms "acceptable," "approved," "required," and "as directed" refer to or indicate work or materials that may be acceptable or approved by the Architect, as the Owner's agent, only to the extent the work or materials conform to the requirements of the Contract Documents and in no way shall be interpreted to imply any responsibility on the part of the Architect concerning the Contractor's obligations under Paragraphs 3.3, 3.11, 3.12, 4.2, 10.2.

1.1.15 'KNOWLEDGE' AND 'REGOGNIZED'
The terms "knowledge" and "recognized" , their respective derivatives and similar terms in the Contract Documents as used in reference to the contractor, shall be interpreted to mean that which the Contractor knows, or should know, recognizes, or should recognize, in exercising the care, skill and diligence required by the Contract Documents. Analogously, the expression "reasonably inferable" and similar terms of the Contract Documents shall be interpreted to mean reasonably inferable by a bidding the Project and exercising the care, skill and diligence required of the Contractor by the Contract Documents.

1.1.16 "NIC" AND "NOT IN CONTRACT
The terms "NIC" and "Not in Contract" indicate items which are shown or indicated for convenience but are not included as part of this Contract.

1.2.1 After the last sentence, add the following:
In the event of a discrepancy in the Contract Documents, the more specific and more detailed descriptive information will take precedence over the general and less detailed description. In case of doubt, the Contractor shall assume that the owner intends that the higher quality, more complete method, system, or process is required. Any work, labor, materials or equipment that may reasonably be inferred from the Contract Documents as being required to produce a functionally complete Project or part thereof, will be supplied by the Contractor whether or not specifically stated in the Contract Documents. Reference to standard specifications, manuals, or codes of any technical society, organization, or association or to the laws or regulations of any governmental authority, whether such reference is specific or by implication shall mean the latest standard specifications, manual, code or laws or regulations in effect at the time of the opening of the bids (or the date of the Contract if no advertised bids), unless otherwise specifically stated. However, no provision of any standard specification, manual, or code shall be effective to change the amount of the contract or to change the duties or the responsibilities of the Owner, Contractor or Architect or any of their consultants, agents or employees from those set forth in the Contract Documents.

1.5 OWNERSHIP AND USE OF DRAWINGS, SPECIFICATIONS AND OTHER INSTRUMENTS OF SERVICE [REFER TO LSA *R.S. 38:2317*]

1.5.1 Delete the first sentence of the paragraph.
1.5.1 In the third sentence: delete the remainder of the sentence after the word "publication".

ARTICLE 2
OWNER

2.1.2 Add the following after the end of the paragraph:
The Owner reserves the right to require the Contractor, all subcontractors and material suppliers to provide lien releases at any time. The Owner reserves the right to withhold progress payments until such lien releases are received for all work for which prior progress payments have been made. Upon the Owner's demand for lien releases (either verbally or written), the Contractor, all subcontractors and material suppliers shall provide such releases with every payment request until Final Acceptance of the Project.

2.2 INFORMATION AND SERVICES REQUIRED OF THE OWNER

2.2.1 Delete this paragraph.

2.2.3. Add at the end of the sentence:
Notwithstanding, the Owner does not guarantee the accuracy of surveys provided regarding the location of utility lines, cables, phone lines, pipes or pipelines or the presence or absence of easements. The Contractor shall confirm the location of each utility and make further investigation of all structural, surface and subsurface conditions of the site of the Project.

2.5 Add 2.5 and 2.6 as follows:

2.5 OWNER'S REPRESENTATIVE
The Architect or Engineer or other professional retained by the Owner to design the Project has the responsibility to administer the Contract for Construction, including inspection by himself and his consultants. The assignment of an Owner's Representative in no way transfers any of the professionals of record responsibilities to the Owner.

2.6 OWNERS RIGHT TO AUDIT
The Contractor shall keep full and accurate records of all costs incurred and items invoiced in connection with the Work. These records shall be made available and open to audit by the Owner or its authorized representatives, or the Legislative Auditor for the State of Louisiana during the performance of the Work and for a period of three (3) years after Final Payment.

ARTICLE 3
CONTRACTOR

3.2.1 Add the following at the end of the paragraph:
The Contractor thoroughly understands the Contract Documents and their intent and purpose. The Owner assumes no responsibility or liability for the physical condition or safety of the Project site or any improvements located on the site. The Contractor is solely responsible for providing a safe place for the performance of the Work. Contractor shall comply with the provisions of the Louisiana Underground Utilities and Facilities Damage Prevention law, R.S. 40:1749.11 et al, as amended prior to any portions of the Work that may require excavation including but not limited to pile driving, digging, auguring, boring, backfilling, dredging, compressing, plowing-in,

trenching, ditching, tunneling, land leveling, grading and or mechanical probing. Damage to any existing underground utilities by the Contractor shall be repaired at the Contractor's sole expense if surveys or other information that has been provided or is available to the contractor indicate the location of said utilities. The Contractor shall undertake to make such further investigations, and coordinate with the Owner to determine the appropriate course of action. Once the course of action is determined, the owner reserves the right to make the appropriate modifications and back-charge the contractor if immediate action is not taken.

3.2.5 Add the following 3.2.5:
3.2.5 Building materials to be incorporated into the Work shall either be certified, in writing, by the manufacturer to be asbestos free or be inspected and tested by accredited testing laboratories and certified to be free of asbestos content in accordance with applicable federal standards, including but not limited to the Asbestos Hazard Emergency Response Act (AHERA) and the Toxic Substance Control Act (TSCA). The word "asbestos" means the Asbestiform, Tremolite, and Actinolite. Copies of tests reports shall be furnished to the Architect. Material discovered to contain asbestos shall be removed immediately at the Contractor's sole cost and expense using current standards of the Louisiana Department of Environmental Quality (DEQ).

3.3.4 Add the following paragraph:
3.3.4 The Contractor shall take all precautions necessary to prevent loss or damage caused by vandalism, theft, burglary, pilferage or any unexplained disappearance of property of the Owner. The Contractor shall have full responsibility for the security of such property of the owner for any such loss, damage or injury.

3.5 Add the following sentence to the end of the Paragraph:
The Contractor shall warrant and guarantee all material and workmanship for a period of one calendar year from the date of recordation of a certificate of Substantial Completion. This warranty shall be in addition to and not in limitation of any other warranty or remedy provided by law or by the Contract Documents.

3.6 TAXES
At the beginning of the sentence, add: "Unless otherwise provided in the Contract Documents,"

3.7 PERMITS, FEES, NOTICES, AND COMPLIANCE WITH LAWS

Add 3.7.1.1
3.7.1.1 Before any Work begins, or within thirty (30) days from the date the Contract is executed, whichever occurs first, the Contractor, at his own expense, shall record the Contract and Bond or Bonds required with the Clerk of Court for Ascension Parish. The Contractor shall furnish the Architect and Owner with a Certificate of Recordation, including date, time, book, and folio number. No payment shall be made until Owner received certificate of recordation.

3.8 ALLOWANCES
Delete Subparagraph 3.8.1, 3.8.2, and 3.8.3 in their entirety and add the following new Subparagraph 3.8.1:
3.8.1 Allowances shall not be made on any of the Work.

3.9 SUPERINTENDENT

3.9.1: Add the following sentence to the end of the paragraph:

"All communications potentially having a bearing on the project schedule, scope or cost shall be documented in writing by the superintendent, and distributed to the Architect. Other communications shall be similarly documented on written request in each case."

3.10 CONTRACTOR'S CONSTRUCTION SCHEDULES

3.10.1: Add the following sentence to the end of the paragraph:

The Contractor shall include with the schedule, for the Owner's and Architect's information, a network analysis to identify those tasks which are on the critical path to completion. Note where any delay in the completion of these tasks will lengthen the project timescale. A revised schedule showing an updated critical path to completion shall be submitted monthly, with each Application and Certificate for Payment. No payment will be made until this schedule is received.

3.10.3: Add the following sentence to the end of the paragraph:

If the work is not on schedule, as determined by the Architect, and the Contractor fails to take action to bring the work on schedule, then the Contractor shall be deemed in default under this Contract and the progress of the work shall be deemed unsatisfactory. Such default may be considered grounds for termination by the Owner for cause in accordance with 14.2.

3.10.4 Add the following:

Submittal by the contractor of a schedule or other documentation showing a completion date for his work prior to the completion date stated in the contract shall not impose any obligation or responsibility on the Owner or Architect for the earlier completion date.

3.12.7 Add at the end of the sentence:

Should the Contractor, subcontractor or sub-subcontractor install, construct, erect or perform any portion of the Work without approval of any required submittal, the Contractor shall bear the cost, responsibility and delay for removal, replacement and/or correction of any and all items, materials and/or labor.

3.13 Use of Site

Add the following sections:

3.13.1 The Contractor acknowledges that the Contractor has inspected the site prior to award and accepted the areas for parking, storage and lay-down of materials and access to the site. The Owner will not be required to alter or interrupt any other operations at the Project site.

3.13.2 The Contractor and any entity for which the Contractor is responsible shall not erect any sign on the Project site without the prior written consent of the Owner.

3.13.3 Without the prior written approval of the Owner, the Contractor shall not permit any worker to use any existing facilities (lavatories, toilets, entrances or similar items) at the Project site other than those designated in the Contract Documents.

Add the following Sections:

3.19 LOG OF CHANGES

The Contractor shall maintain a current log of all RFI's, Change Orders and Construction Change Directives at the site of the Project and shall provide the Owner and Architect access to the same as requested. All such logs must be updated and reviewed at monthly project meetings.

3.20 FAILURE TO PERFORM WORK

Contractor shall be liable to the Owner for all cost or damages that the Owner incurs as a result of the Contractor's failure to perform the Work, or any part thereof, in accordance with the Contract Documents. Contractor's failure to perform shall include, but not be limited to, the failure of its subcontractors and/or suppliers of any tier to perform. The Contractor's liability to the Owner shall include, but not be limited to (1) the increased cost of performance, including extended services of the Architect, Owner's Construction Manager and other consultants, resulting from the Contractor's failure to comply with the Contract Documents; (2) costs of corrective or warranty work; (3) liability to third parties; (4) re-procurement costs; (5) attorney fees and related costs, including costs incurred in enforcing Owner's rights under the Contract Documents; and (6) liquidated damages.

3.21 LIENS

In the event a lien is filed by anyone in relation to the Work, the Owner shall have the right (1) to require the Contractor furnish to the Owner a release of a Lien or claim recorded by the person or entity filling the claim; (2) to require the Contractor to discharge the Lien by posting a bond with the Clerk of Court within five (5) calendar days of notice by the Owner to the Contractor; and/or (3) to retain out of any payment due or thereafter to become due an amount sufficient to indemnify the Owner against any Lien or claims of a Lien, including bond premiums and attorney fees and to apply the same in such manner as Owner deems necessary to satisfy such claim and Liens.

In the event such Lien is not discharged, the Contractor at its sole cost and expense, including attorney fees, shall hold harmless and defend Owner of and from any and all claims, lawsuits, causes of actions and demands of any person or entity asserting or claiming any right as a result of any Lien or claim recorded or unrecorded, against the Contract Funds or the Owner's property.

The Owner shall have the right to terminate the Contract for default or to bond off said Lien (s) all costs incurred as a result thereof, including but not limited to, bond premiums and attorney fees.

Prior to the receipt of partial or Final Payment, as appropriate, Contractor shall provide the Owner a partial or final release of any liens or claims and a partial or final release of all Liens and claims of all persons furnishing labor and/or materials to the Work with satisfactory evidence that there are no other Liens or claims whatsoever outstanding against the Work or Contract.

3.22 WORK RELATED TO EXISTING FACILITIES

3.22.1 The Contractor shall not perform Work in existing buildings that will interfere with normal school operations, teaching, normal traffic flow, produce excessive noise or shut down utilities without forty-eight (48) hours written notice to the Owner and then only with their concurrence.

3.22.2 All means of egress shall be maintained at all times during school occupancy to comply with exit requirements in the NFPA 101 Life Safety Code.

3.22.3 The Contractor shall not allow traffic or operations to encumber school vehicle or pedestrian traffic during school hours to include before school and after school programs. Space for parking of Contractor's personnel and subcontractors is designated in the Contract Documents.

ARTICLE 4
ARCHITECT

4.1 GENERAL

Delete Subparagraph 4.1.1 and substitute the following:

4.1.1 The term Architect, when used in the Contract Documents, shall mean the prime Designer (Architect, Engineer or Landscape Architect), or his authorized representative, lawfully licensed to practice architecture, engineering or landscape architecture in the State of Louisiana, identified as such in the Agreement and is referred to throughout the Contract Documents as if singular in number.

Where the term "Initial Decision Maker" (IDM) is used in the Contract Documents, the Architect is the Initial Decision Maker.

4.2 ADMINISTRATION OF THE CONTRACT

4.2.1 In the first sentence, delete the phrase "the date the Architect issues the final Certificate for Payment" and replace with the phrase *"expiration of (1) one year correction period."*

4.2.10 Delete the second sentence of this paragraph.

ARTICLE 5
SUBCONTRACTORS

5.2 AWARD OF SUBCONTRACTS AND OTHER CONTRACTS FOR PORTIONS OF THE WORK

Delete Subparagraph 5.2.1, and substitute the following:

5.2.1 Unless otherwise required by the Contract Documents, the Contractor shall furnish at the Pre-Construction Conference, to the Owner and the Architect, the following prior to commencement of any work: No Contractor payments shall be made until this information is received in detail.

a) Fixed job site overhead cost itemized with documentation to support daily rates.

b) A written list of the names of the Persons or entities (including those who are to furnish materials or equipment fabricated to a special design), proposed for each of the principal portions of the Work.
c) Labor Burden by trade for both Subcontractors and General Contractor.
d) Internal Rate Charges for all significant company owned equipment.
e) Preliminary Schedule for Architect and Owner review. It is imperative that the schedule includes a critical path to completion. This Schedule shall be due within 14 calendar days following award of the contract.
f) Contact list for General Contractor to include Project Manager and Superintendent.

5.2.2 Delete section 5.2.2 in its entirety.

5.2.4 Add the following: The Contractor shall notify the Architect and Owner of any change or substitution of any Subcontractor, and the owner reserves the right to make objections prior to commencement of work.

ARTICLE 7
CHANGES IN THE WORK

7.1 GENERAL

7.1.3 Add the following sentence at the end of the paragraph:
Contractor shall not proceed without executed/signed Change Order or other written authorization by the Owner.

7.2 CHANGE ORDERS

Add new 7.2.1.4
7.2.1.4 Any and all adjustments to the Contract Time requested or claimed by the Contractor as a result of a Change Order shall require the following written documentation and justification:
a) The Contractor's most recent schedule in use prior to the change.
b) A revised schedule indicating how the Change affects the Critical Path.
c) Changes that affect or concern activities containing float or slack time (i.e. not on critical path) that can be accomplished within such float or slack time shall not result in an increase in the Contract Time.

Add the following new paragraphs:
7.2.2 Before a Change Order is prepared, the Contractor shall provide and deliver to the Architect the following information, not subject to waiver, within ten days after being notified to prepare said Change Order:
1. An itemized list of material and labor cost for each Subcontractor's and/or Sub-subcontractor's Work, including quantities and unit prices for each item of material.
2. An itemized list of material and labor cost for the General Contractor's Work, including quantities and unit prices for each item of labor and each item of material.
3. An updated project schedule clearly showing the impact the proposed change might have on the critical path to completion.

7.2.3 After a Change Order has been approved, no future request for extension/adjustments of Contract Time, Sum or cost shall be considered for that particular Change Order

7.2.4 The Architect will prepare a draft of the proposed Change Order. If all parties are in agreement to the scope of work changes and the Change Order is signed within 14 days of the original issuance, it shall be made part of the Contract Documents. If agreement is not reached within that time frame, the Owner reserves the right to instruct the Architect to issue a Change Directive, which will be administered per section 7.3.

7.3 CONSTRUCTION CHANGE DIRECTIVES

7.3.7 Delete the following phrase from the end of the first sentence: "the Agreement, or if no such amount is set forth in the Agreement, a reasonable amount." Replace with the following phrase: "section 7.3.7.6 found below."

7.3.7 Delete the following from .1 of the list: "fringe benefits required by agreement or custom,"

Add 7.3.7.6

7.3.7.6 Portions of profit and overhead listed above that will be included in the Change Order, shall not exceed the following:

1. For the Contractor for work that is performed with its own forces, not to exceed 15% of the cost of the items listed above.
2. For the Contractor for work performed by his Subcontractor, 5% of the amount due the Subcontractor.
3. For each Subcontractor, or Subcontractor involved, for work performed by that Subcontractor's of Subcontractor's own forces, 15%.
4. For each Subcontractor, for work performed by the Subcontractor's Subcontractors, 5% of the amount due to the Subcontractor.
5. In order to facilitate checking of quotations for extras or credits, all proposals shall be accompanied by a complete itemization of costs including labor, materials, and subcontractors. Labor and materials shall be itemized in the manner specified above. Where major cost items are Subcontractor's cost items, they shall be itemized also.

Add 7.3.11 and 7.3.12

7.3.11 Changes in the Work performed by the Contractor without approval or consent of the Owner shall be performed at no cost to the Owner and without adjustment in the Contract Time.

7.3.12 By executing the Change Order, the Contractor acknowledges that:

1. The Owner bears no responsibility for the conditions resulting in the change to the scope of work.
2. The Change Order is for the full and final amount of the Contract Sum and the Contract Time adjustments due the Contractor for all additional Work related to the Change Order.
3. Any stated extension of Contract Time is equitable in nature and the Contractor waives any further claims for any additional Contract Time or any Contract Sum for whatever reason and of whatever kind, whether direct or indirect costs, profit, overhead or any

other expenses for the work, enumerated in the Change Order and any and all claims for an extension of Contract Time or additional Contract Sum are waived in their entirety.

ARTICLE 8
TIME

8.2 PROGRESS AND COMPLETION

Add the following paragraphs to Subparagraph 8.2.1:
Completion of the work must be within the Time for Completion stated in the Agreement, subject to such extensions as may be granted under Section 8.3. The Contractor agrees to commence work not later than fourteen (14) days after the transmittal date of Written Notice to Proceed from the Owner and to substantially complete the project within the time stated in the Contract.
The owner shall be entitled to the sum stated in the Contract Documents.
Such Liquidated Damages shall be withheld by the owner from the amounts due the Contractor for progress payments.

8.3 DELAYS AND EXTENSIONS OF TIME

8.3.1 In the first sentence after the words "owner pending' delete the words "mediation and arbitration" and replace with the word "litigation". Delete the last word "determine" through the end of the sentence and substitute the following:
"…recommend, subject to Owner's approval of Change Order. If the claim is not made within the limits of Article 15, all right for future claims for that month are waived."

To the end of paragraph 8.3.1, add: "In any instance, the Contractor will be required to submit an updated project schedule, clearly showing the impact on the critical path to completion. In no instance will additional time be granted if the critical path to completion is not impacted."

Add 8.3.4 and 8.3.5

8.3.4 The Owner's operations will be impacted and delayed if the project is not substantially complete within the time set forth in the Contract Documents. The Contractor and the Contractor's surety shall be liable for and shall pay to the Owner the sum stated in the Contract Documents as fixed and agreed liquidated damages for each consecutive calendar day (Saturday's, Sunday's and holidays included), of delay until the Work is substantially complete or, as applicable until the Work is finally complete or the Punch List is complete (whichever occurs last). The Owner shall be paid the sum stated in the Contract Documents for liquidated damages.

Such liquidated damages shall be withheld by the Owner from the amounts due the Contractor for progress payments and deducted from the Contract Sum by a Construction Change Directive signed only by the Owner and Architect. If no funds are remaining, the Contractor shall pay the amount of liquidated damages within 15 days of written notification of the amount due.

8.3.5 If at any time the Work lags, sufficient increased Work forces and overtime hours, including weekends shall be provided by the Contractor to maintain the schedule to insure that the

Project is completed in accordance with the time set forth by the Contract Documents. Said overtime and cost of additional Work forces shall be paid for by the Contractor.

ARTICLE 9
PAYMENTS AND COMPLETION

9.2 SCHEDULE OF VALUES

Delete Subparagraph 9.2 and substitute the following 9.2 and 9.2.1:

9.2 At the Pre-Construction Meeting, the Contractor shall submit to the Architect and Owner a Schedule of Values allocated to the various portions of the Work, providing a detailed breakdown of the Contract Sum. The Contractor shall also submit such data to support and substantiate the accuracy of the schedule as the Architect and the Owner may require. The contents of the Project Manual shall be used as a basis for format for listing cost of Work.

9.2.1 The schedule of values shall be submitted on AIA Documents G 703 – 1992, Continuation Sheet, submitted in detail.

1. Use the Index of the Project Manual to list the description of Work required under column B of G 703. List costs of Work for each Division of the Specifications. The cost for each division shall include labor, materials, to be shown separately.
2. Under the General Conditions and Division 1, costs of Work of General conditions, Supplementary Conditions, Temporary Requirements, and Cleaning shall be listed separately with separate cost indicated for Insurance, Bonds, Temporary requirements, and Cleaning, listed separately thereafter and shall be paid for monthly, spread out during the entire period of the Contract. Large sums requested by the Contractor in an early part of the Contract, for items listed in this Paragraph, shall be submitted with invoices, marked paid, showing that these bills have been paid. Up-front unidentified cost of Work shall not be arbitrarily lumped under the General Conditions and Division 1.
3. Round off cost figures of each heading to the nearest dollar. The total of all items shall equal the total Contract Sum.
4. For a multiple site or location Contract, the Schedule of Values shall be allocated for each separate site or location.

9.3 APPLICATIONS FOR PAYMENT

Delete Subparagraph 9.3.1 substitute the following:

9.3.1 Monthly, the Contractor shall submit to the Architect an Application & Certificate for Payment on the AIA Document G702-1992, accompanied by AIA Document G703-1992, a Current Schedule, a notarized Contractor's Waiver and Release of Liens to Owner and supported by any additional data substantiating the Contractor's right to payment as the Owner or the Architect may require.

Change Orders and Construction Change Directives shall be individually identified as a separate item in any application for payment.

A Draft application for payment is to be provided and reviewed by the Architect and Owner at the Monthly Progress Meeting. The Final Monthly Application for Payment shall be submitted following the monthly meeting for the value of labor and materials incorporated into the work and of materials, suitably stored, at the site as of the twenty-fifth day of the preceding month, less normal retainage as follows, per R.S.38:2248:

A) Projects with Contract price up to $500,000.00 - 10% of the Contract price.
B) Projects with Contract price of $500,000.00, or more - 5% of the Contract price.
C) No payment will be made until the revised schedule required by 3.10.1 is received.
D) The normal retainage shall not be due and payable to the Contractor until after substantial completion and expiration of the forty-five day lien period and submission by the Contractor to the Architect of a clear lien certificate and invoice for retainage."

9.5.1 add 9.5.1.8 and 9.5.1.9 as follows:

9.5.1.8 the value of the Punch List:

9.5.1.9 or rejection of any part of the Work by any governmental authority having jurisdiction over the Project.

9.6 PROGRESS PAYMENTS

9.6.2 Delete the phrase: "no later than seven days" from the first sentence.

After the end of the second sentence, add the following:
"R.S. 9:2784 (A) and (C) requires a Contractor or Subcontractor to make payment due to each Subcontractor and supplier within fourteen (14) consecutive days of the receipt of payment from the Owner. If not paid, a penalty in the amount of 1/2 of 1% per day is due, up to a maximum of 15%, from the expiration date until paid. The contractor or subcontractor, whichever is applicable, is solely responsible for payment of a penalty."

9.6.4 Add the following to the end of the Subparagraph:
Pursuant to La. R.S. 38:2242, when the Owner receives any claim of nonpayment arising out of the Contract, the owner shall deduct 125% of such claim from the Contract Sum. The Contractor, or any interested party, may deposit security, in accordance with La. R.S. 38:2242.2, guaranteeing payment of the claim with the recorder of mortgages of the parish where the Work has been done. When the Owner receives original proof of such guarantee from the recorder of mortgages, the claim deduction will be added back to the Contract Sum.

9.7 FAILURE OF PAYMENT

Delete Subparagraph 9.7.

9.8 SUBSTANTIAL COMPLETION: Delete this entire section and substitute the following:

9.8 SUBSTANTIAL COMPLETION

9.8.1 Substantial Completion is the stage in the progress of the Work when the Work is sufficiently complete in accordance with the Contract Documents so that the Owner can occupy or utilize the Work for its intended use and when all required occupancy permits, if any, have been issued and copies of the same delivered to the Owner.

The Architect shall determine if the Project is substantially complete in accordance with the Contract Documents.

9.8.2 When the Contractor considers that the Work, or a portion thereof which the Owner agrees to accept separately, is substantially complete, the Contractor shall prepare and submit to the Architect a comprehensive list of items to be completed or corrected prior to final payment and request the Architect's review. Failure to include an item on such list does not alter the responsibility of the Contractor to complete all Work in accordance with the Contract Documents.

9.8.3 The Work will not be considered suitable for Substantial Completion review until a) all Project systems included in the Work are operational as designed; b) designated instruction of the Owner's personnel in the operations systems has been completed; and c) all finishes within the Contract Documents are in place.

In general, the only remaining Work shall be minor in nature, so that the Owner may occupy the building on a certain date and the completion of the Work by the Contractor will not materially interfere or hamper the normal business operations of the Owner. A further prerequisite to the Work being accepted as Substantially Complete, is the Owner's receipt of the Roofing Manufacturer's warranties, where roof Work is a part of the Contract, and all other Required Warranties and Operating and Maintenance manuals

9.8.4 Upon receipt of the request for review and Contractor's list, the Architect will make an inspection to determine whether the Work or designated portion thereof is substantially complete. The Contractor shall also notify the Architect when the Project is ready for inspection by the State Fire Marshall's Office. The Contractor and his mechanical, electrical and fire alarm/fire suppressive Subcontractors shall attend all inspections for Substantial Completion and inspections for occupancy conducted by the Louisiana State Fire Marshal, and other local officials.

If the Architect's inspection discloses any item, whether or not included on the Contractor's list, which is **not** sufficiently complete in accordance with the Contract Documents so that the Owner can occupy or utilize the Work or designated portion thereof for its intended use, the Contractor shall, before issuance of the Certificate of Substantial Completion, complete or correct such items upon notification by the Architect. In such case, the contractor shall then submit a request for another inspection by the Architect to determine Substantial Completion. The Architect will make only two (2) such inspections to determine Substantial Completion, after which the Contractor shall pay the Architect at the rate established in the Owner-Architect Agreement.

9.8.5 In addition to the inspection described in 9.8.4, upon receipt of the Contractor's list described in 9.8.2, the Architect shall prepare a "Punch List" of exceptions and the dollar value of each item. The monetary value assigned to this list will be **twice** of the estimated actual value of the items to be completed or corrected. Cost of these items shall be prepared in the same format

as the schedule of values. No funds assigned for the Punch List value shall be due the Contractor until all the Punch list items are completed and accepted by the Architect.

If the dollar value of the Punch List exceeds the remaining Contract Sum less the retainage amount, then the Project shall not be accepted as substantially complete.

As a further condition of obtaining certification of Substantial Completion, the Contractor shall certify that all remaining Work will be completed within Forty Five (45) consecutive calendar days following the date of Substantial Completion, or as otherwise agreed upon.

If the remaining funds are less than that required to complete the Work, the Contractor shall pay the difference within 10 calendar days of notice thereof.

9.8.6 When the Work or designated portion thereof is substantially complete as determined by the Architect, the Architect will prepare a Certificate of Completion that 1) shall establish the date of Substantial Completion, 2) shall establish responsibilities of the Owner and Contractor for security, maintenance, heat, utilities, damage to the Work, and insurance, and 3) shall fix the 'punch list period' of forty-five (45) calendar days or such other agreed upon period within which the Contractor shall finish all items on the Punch List accompanying the Certificate.

Warranties required by the Contract Documents shall commence on the date of Substantial Completion of the Work or designated portion thereof unless otherwise provided in the Certificate of Substantial Completion.

9.8.7 The Certificate of Substantial Completion shall be submitted to the Owner and the Contractor for their written acceptance of responsibilities assigned to them in such Certificate.

Upon receipt of a fully executed Certificate of Substantial Completion with an attached Punch List, the Contractor shall record the Certificate of Substantial Completion, within 72 hours of issuance with the Clerk of Court in the Parish of Ascension, Louisiana and provide the recording information to the Owner and Architect.

9.9.1 Delete section 9.9.1 and substitute the following:
Partial Occupancy is that stage in the progress of the Work when a designated portion of the Work is sufficiently complete in accordance with the Contract Documents so the Owner can occupy or utilize the designated portion of the Work for its intended use. The Owner may occupy or use any substantially completed portion of the Work so designated by separate agreement with the Contractor and authorized by public authorities having jurisdiction over the Work. Such occupancy or use may commence provided the Owner and Contractor have accepted in writing the responsibilities assigned to each of them for payments, if any, security, maintenance, heat, utilities, damage to the Work and insurance, and have agreed in writing concerning the period for correction of the Work and commencement of warranties required by the Contract Documents. When the Contractor considers the designated portion substantially complete the Contractor shall prepare and submit a list to the Architect as provided under Subparagraph 9.8.2. Consent of the Contractor to partial occupancy or use shall not be unreasonably withheld.

9.10 FINAL COMPLETION AND FINAL PAYMENT

9.10.1 After the first sentence, add the following:
If the Architect does not find the work acceptable under the Contract Documents, the Architect shall make one additional inspection. If the work is still not acceptable, the Architect, and each of the Architect's principal consultants, shall be paid at the rate established in the Owner-Architect Agreement, for their time at the project site for each additional inspection, to be withheld from the unpaid funds remaining in the Contract sum. The payment shall be made by the owner and deducted from the construction contract funds, or if no funds remain, paid directly by the Contractor or its surety.

9.10.2 Add the following to the end of the first sentence: (6) Neither the final payment nor any part of the retained percentage shall become due to the Contractor, until the Contractor delivers to the Owner a Certificate by the Clerk of Court of the Parish that the Owner's Substantial Completion Certificate has been recorded, more than 45 days has elapsed since the recordation, no liens have been recorded affecting this property, and all affidavits, consents and releases specified in these General Conditions."

9.10.2 Add this sentence at the end of the paragraph:
Upon receipt by the Architect of all Project close-out documents and a recommendation for acceptance of final completion, a close-out meeting will be scheduled by the Architect and Owner with the Contractor for the review and acceptance of all of the above identified items. Provided all items are complete and accepted by the Owner, the Owner will then authorize the issuance of the Final Payment.

9.11 LIQUIDATED DAMAGES

ADD 9.11

To the extent that such are due, owing, and payable to the Owner pursuant to the terms of the Contract, the Contractor and the Contractor's Surety agree and shall be liable for and pay to the Owner the sum stipulated in the Contract Documents as liquidated damages, which are to start on the first day after the final date of the contract and continue until the date of Substantial Completion, as issued by the Architect. Any liquidated damages shall be deducted from the remaining Contract Funds by a Construction Change Directive signed only by the Architect and Owner, or if no funds remain, to be paid by the Contractor or the Contractor's Surety.

In addition, if the "punch list" items are not complete before the end of the 45 day 'punch list' period, the contractor will be charged additional liquidated damages in an amount equal to half of the stipulated liquidated damages indicated in the Instructions to Bidders for this project. The Contractor shall also pay the expenses of the Architect as provided hereafter and the Owner may hold the Contractor in default. If the Owner finds the Contractor is in default, the Surety shall be notified. If within thirty (30) days after notification, the Surety has not completed the Punch List, the Owner may, at its option, contract to have the balance of the Work completed and pay for such Work with unpaid funds remaining in the Contract Sum. Finding the Contractor in default shall constitute a reason for disqualification of the Contractor from bidding on future contracts with Ascension Parish School Board. If the Surety fails to complete the Punch List within the stipulated time period, the Owner may not accept bonds submitted from the company in the future.

ARTICLE 10
PROTECTION OF PERSONS AND PROPERTY

10.2 SAFETY OF PERSONS AND PROPERTY

10.2.1 Add the following sub-sections:

.4 the indoor air quality of buildings where students, teachers, employees and visitors occupy the areas adjacent to or near the work on the Project site;

.5 the exhaust systems and existing fresh air intake devices to prevent dust or fumes caused by the Work entering such systems; and

.6 the Contractor expressly agrees that it is exclusively responsible for compliance with the Occupational Safety and Health Act (OSHA) and state and local regulations for the construction in that it is the "employer" within the meaning of those regulations. It is the expressed intent of the parties that the Contractor, not the Architect, nor the Owner are in charge of the Work. Any provision in the Contract Documents in conflict with this paragraph shall not be null and void.

10.2.2 In the first sentence, between the words "bearing on" and "safety", add the words "the health and".

After the last sentence, add the following:
Contractor shall provide for the marking of all underground utilities prior to any digging, excavation or other disturbance of earth and provide the Louisiana One Call reference number to the Architect and Owner.

10.2.9. SECURITY OF SITE
Contractor shall immediately make an oral report to the Architect and the Owner and promptly provide a written report to the Architect and Owner, about all accidents arising out of or in connection with the Work that cause death, injury, interrupts utility services or property damage.

10.3 HAZARDOUS MATERIALS

10.3.1 In the second sentence after "(PCB)" add "or lead"

After the last sentence, add the following:
Mold is not considered to be hazardous for the purposes of this Section; however, the Contractor shall notify the Owner and the Architect, in writing, of the presence of any suspected black mold on building components in any affected area of the Project.

10.3.2 After the first sentence, delete all remaining sentences. Add at the end "When the material or substance has been rendered harmless, Work in the affected area shall resume upon written agreement of the Owner and Contractor. If appropriate, by Change Order or Change Directive, the Contract Time may be extended accordingly and the Contract Sum may be adjusted to allow for the Contractor's reasonable costs of shut-down, delay and start-up."

10.3.3 Delete Subparagraph 10.3.3.

10.4 EMERGENCIES

Delete Subparagraph 10.4 and substitute the following:
10.4 In an emergency affecting the safety of persons or property, the Contractor shall notify the Owner and Architect immediately of the emergency, simultaneously acting at his discretion to prevent damage, injury, or loss. Any additional compensation or extension of time claimed by the Contractor on account of emergency work shall be determined as provided in Article 15 and Article 7.

ARTICLE 11
INSURANCE AND BONDS

11.1 Change title of 11.1 to read: "STANDARDIZED INSURANCE REQUIREMENTS FOR ALL APSB CONTRACTS"

Add the following sentence to the end of 11.1.2: All policies and certificates of insurance of the Contractor/Subcontractor shall contain the following clauses:

11.1.2.1 The Contractor/Subcontractor's insurer will have no right of recovery or subrogation against the Owner, it being the intention of the parties that the insurance policies so affected shall protect both parties and the primary coverage for any and all losses covered by the below described insurance.

11.1.2.2 The Owner shall be named as an additional insured as regards negligence by the contractor (ISO Forms CG 20 10, Current form approved for use in Louisiana).

11.1.2.3 The insurance companies issuing the policy or policies shall have no direct recourse against the Owner for payment of any premiums or for assessments under any form of policy.

11.1.2.4 Any and all deductibles in the below described insurance policies shall be assumed by and be at the sole risk of the Contractor or Subcontractor.

Add the following behind section **11.1.3**:

The Contractor/Subcontractor, prior to commencing work, shall provide at his own expense, proof of the following insurance coverages required by the contract to the Owner in insurance companies authorized in the State of Louisiana. Operations to be performed by contract to be shown on the Certificate. Insurance is to be placed with insurers with an A. M. Best's rating of no less than "A" or above or be a qualified self-insured with "A" rated reinsurance; preference will be given to admitted (LIGA) insurers. This rating requirement will be waived for the workers' compensation coverage.

Thirty days prior notice of cancellation shall be given to the Owner by registered mail, return receipt requested, on all of the required coverage provided to the Owner. Ten day notice shall be required for cancellation due to non-payment. All notices will name the Contractor/ Subcontractor and identify the contract number.

Insurance coverage specified in the GENERAL CONDITIONS (AIA Document A201, 2007 Edition) to be provided by the Contractor, and any other insurance described below shall be furnished with the following minimum limits:

11.1.3.1 Workers' Compensation : $1,000,000 limit required.

11.1.3.2 Commercial General Liability Insurance with a combined single limit per occurrence for bodily injury and property damage. This insurance shall include coverage for bodily injury and property damage, and indicate on the Certificate of Insurance which of the seven (7) coverages required below is not included in the policy, if any:

1 Premises - Operations;
2 Broad Form Contractual Liability;
3 Products and Completed Operations;
4 Use of Contractors and Subcontractors;
5 Personal Injury;
6 Broad Form Property Damage;
7 Explosion, Collapse and Underground (XCU) Coverage.

NOTE: On the certification of insurance, under the description of operations, the following wording is required: THE AGGREGATE LOSS LIMIT APPLIES TO EACH PROJECT, or a copy of ISO form CG2503 (Current form approved for use in Louisiana) shall be submitted.

Note: the Products and Completed Operations shall not have a sunset clause.

COMBINED SINGLE LIMIT (CSL) - AMOUNT OF INSURANCE REQUIRED

Type of Construction	Projects under $1,000,000	Projects Over $1,000,000
New Buildings/Renovations:		
-Each Occurrence/ Minimum Limit	$1,000,000	$3,000,000
-Aggregate (Applicable to this Contract ONLY)	$2,000,000	$6,000,000

Renovations: *The building(s) value for this Project will be identified in the Contract documents.*

11.1.3.3 Business Automobile Liability Insurance with a combined single limit of $1,000,000 per occurrence for bodily injury and property damage, unless otherwise indicated. This insurance shall include for bodily injury and property damage the following coverages:

1 Owned automobiles;
2 Hired automobiles;
3 Non-owned automobiles.

11.1.3.4 An Umbrella Policy may be used to meet minimum requirements.

11.1.4 INSURANCE REQUIREMENTS FOR CONTRACTORS

Contractor shall procure and maintain for the duration of the contract insurance against claims for injuries to persons or damages to property which may arise from or in connection with the performance of the work hereunder by the Contractor, his agents, representatives, employees or subcontractors. It is the Contractor's responsibility to assure that all coverages required in this contract are obtained and maintained through the completion of the project. This also includes extended coverages for periods beyond the contract terms when appropriate. The cost of such insurance shall be included in the Contractor's bid.

11.1.4.1 MINIMUM SCOPE OF INSURANCE
Coverage shall be at least as broad as:

11.1.4.1.1 Insurance Services Office Commercial General Liability coverage ("occurrence") form CG 0001. (Current form approved for use in Louisiana.) "Claims Made" form is unacceptable. The "occurrence form" shall not have a "sunset clause".

11.1.4.1.2 Insurance Services Office form number CA 0001 (Current form approved for use in Louisiana.) covering Automobile Liability. The policy shall provide coverage for owned, hired, and non-owned coverage. If an automobile is to be utilized in the execution of this contract, and the vendor/contractor does not own a vehicle, then proof of hired and non-owned coverage is sufficient.

11.1.4.1.3 Workers' Compensation insurance as required by the Labor Code of the State of Louisiana, including Employers Liability insurance.

11.1.4.2 MINIMUM LIMITS OF INSURANCE
Contractor shall maintain limits no less than that provided in the previous subsections.

11.1.4.3 DEDUCTIBLES AND SELF-INSURED RETENTIONS
Any deductibles or self-insured retentions must be declared to and approved by the Owner. At the option of the Owner, either: the insurer shall reduce or eliminate such deductibles or self-insured retentions as respects the Owner, its officers, officials, employees and volunteers; or the Contractor shall procure a bond guaranteeing payment of losses and related investigations, claim administration and defense expenses.

11.1.4.4 OTHER INSURANCE PROVISIONS
The policies are to contain, or be endorsed to contain, the following provisions:

11.1.4.4.1 General Liability and Automobile Liability Coverages

11.1.4.4.1.1 The Owner, its officers, officials, employees, Boards and Commissions and volunteers are to be added as "additional insureds" as respects liability arising out of activities performed by or on behalf of the Contractor; products and completed operations of the Contractor, premises owned, occupied or used by the Contractor. The coverage shall contain no special limitations on the scope of protection afforded to the Owner, its officers, officials, employees or volunteers.

It is understood that the business auto policy under "Who is an Insured" automatically provides liability coverage in favor of the APSB.

11.1.4.4.1.2 Any failure to comply with reporting provisions of the policy shall not affect coverage provided to the Owner, its officers, officials, employees, or volunteers.
11.1.4.4.1.3 The Contractor's insurance shall apply separately to each insured against whom claim is made or suit is brought, except with respect to the limits of the insurer's liability.

11.1.4.4.2 All Coverages
Each insurance policy required by this clause shall be endorsed to state that coverage shall not be suspended, voided, canceled by either party, reduced in coverage or in limits except after thirty (30) days' prior written notice by certified mail, return receipt requested, has been given to the Owner.

11.1.4.5 VERIFICATION OF COVERAGE
Contractor shall furnish the Owner with certificates of insurance effecting coverage required. The certificates for each insurance policy are to be signed by a person authorized by that insurer to bind coverage on its behalf.
The certificates are to be received and reviewed by the Owner before work commences. The Owner reserves the right to require complete, certified copies of all required insurance policies, at any time.

Delete section 11.2 – Owner's Liability Insurance

Delete section 11.3 (and all sub-sections 11.3.1 through 11.3.10) – Property Insurance, and replace entire section with the following:

11.3.1 The Contractor shall purchase and maintain property insurance upon the entire work included in the contract for an amount equal to the greater of the full-completed value or the amount of the construction contract including any amendments thereto .
The general contractor's policy shall provide "ALL RISK" Builder's Risk insurance (extended to include the perils of wind, collapse, vandalism/malicious mischief, and theft, including theft of materials whether or not attached to any structure.) The "All Risk" Builder's Risk Insurance must also cover architects' and engineers' fees that may be necessary to provide plans and specifications and supervision of work for the repair and/or replacement of property damage caused by a covered peril not to exceed 10% of the cost of those repair and/or replacements.
The policy must include the interest of the Owner, Contractor and Subcontractors.
All property losses shall be made payable to and adjusted with the Owner.

11.3.2 All policies of insurance shall be approved by the Owner and Owner Insurance advisor prior to the inception of any work.

11.3.3 Other insurance required is as follows:

11.3.3.1 Owner's Protective Liability Insurance shall be furnished by the Contractor and naming the APSB as the Insured.

Projects Under	Projects Over
$1,000,000	$1,000,000

CSL - Each Occurrence	$1,000,000	$3,000,000

11.3.3.2 Asbestos Abatement Liability-(required when asbestos abatement is included in the work)

The contractor or subcontractor who will be doing the asbestos abatement as outlined in this contract shall obtain and maintain such liability coverage for the asbestos abatement hazard and exposure with minimum limits of $1,000,000 per occurrence for the duration of the project. The policy shall name the State of Louisiana, all State departments, agencies, boards and commissions as an additional insured for the project. The policy shall be written on an "occurrence" form without a sunset clause. Claims-made coverage is unacceptable. The insurance company shall have an A.M. Best rating of at least A-:VI or better. (pertains to this section only)

11.3.3.3 If, at any time, any of the said policies shall be or become unsatisfactory to the Owner, as to form or substance, or if a company issuing any such policy shall be or become unsatisfactory to the Owner, the Contractor/Subcontractor shall promptly obtain a new policy, submit the same to the Owner for approval and submit a certificate thereof as hereinabove provided.

Upon failure of the Contractor/Subcontractor to furnish, deliver and maintain such insurance as above provided, this contract, at the election of the Owner, may be forthwith declared suspended, discontinued or terminated.

Failure of the Contractor/Subcontractor to take out and/or to maintain or the taking out and/or maintenance of any required insurance, shall not relieve the Contractor/Subcontractor from any liability under the contract, nor shall the insurance requirements be construed to conflict with the obligations of the Contractor/Subcontractor concerning indemnification.

The Owner reserves the right to require complete, certified copies of all required insurance policies, at any time.

11.3.4 RISKS AND INDEMNIFICATIONS ASSUMED BY THE CONTRACTOR Neither the acceptance of the completed work nor payment therefore shall release the Contractor/Subcontractor from his obligations from the insurance requirements or indemnification agreement.

11.3.4.1 Additional insurance may be required on an individual basis for extra hazardous contracts and specific service agreements.
If such additional insurance is required for a specific contract, that requirement will be described in the "Special Conditions" of the contract specifications.

11.3.4.2 If any of the Property and Casualty insurance requirements are not complied with at their renewal dates, payments to the Contractor/Subcontractor will be withheld until those requirements have been met, or at the option of the Owner, the Owner may pay the Renewal Premium and withhold such payments from any monies due the Contractor/Subcontractor.

11.3.5 SUBCONTRACTORS

Contractor shall include all subcontractors as insureds under its policies or shall furnish separate certificates from each subcontractor. All coverages for subcontractors shall be subject to all of the requirements stated herein.

11.3.6 CERTIFICATE OF INSURANCE

Contractor shall furnish the Owner with certificates of insurance affecting coverage required by this clause. The certificates for each insurance policy are to be signed by a person authorized by that insurer to bind coverage on its behalf. The certificates of insurance must also contain the following in the "Description of Operations" section:
The certificates are to be provided to the Owner within 15 days of the award of the contract and prior to the signing of the contract.
The Owner reserves the right to require complete, certified copies of all required insurance policies, at any time.

11.4 PERFORMANCE AND PAYMENT BOND

11.4.1 Delete the phrase, "The Owner shall have the right to require the Contractor to" and replace with the phrase, "The Contractor shall".

Add the following Subparagraph **11.4.3**:

11.4.3 RECORDATION OF CONTRACT AND BOND [38:2241A(2)]
Within thirty (30) days of the execution of the Contract Between Owner and Contractor, the Contractor shall record the Contract and the Performance and Payment Bond with the Clerk of Court of Ascension Parish. The Contractor shall also provide APSB with a copy of the Standard Recorded contract.

11.5 OTHER INSURANCE or FAILURE TO OBTAIN REQUIRED INSURANCE

The contractor has the right to purchase coverage or self-insure any exposures not required by the bid specifications or contract documents, but shall be held liable for all losses, deductibles, self-insurance for coverages not required.
Contractor shall also be liable for any losses that occur where insurance is contractually required but not procured or purchased by the Contractor or permitted to lapse or be cancelled.

11.6 STATUS OF EMPLOYEES OF CONTRACTOR AND SUBCONTRACTORS - STATUTORY EMPLOYER STATUS

11.6 STATUTORY EMPLOYER STATUS

All Contractors must comply with the directives of Act 315 of the 1997 Louisiana Regular Session regarding guidelines for determining statutory employer status under La R.S. 23:1061, effective June 17, 1997, and in consideration thereof:

ARTICLE 12
UNCOVERING AND CORRECTION OF WORK

12.2.2 AFTER SUBSTANTIAL COMPLETION

12.2.2.1 At the end of the paragraph add the following sentences:
"If the Contractor fails to correct Work identified as defective and covered by warranties, the Owner may hold the Contractor in default. If the Owner finds the Contractor is in default, the Surety shall be notified.
Finding the Contractor in default shall constitute a reason for disqualification of the Contractor from bidding on future APSB contracts.

ARTICLE 13
MISCELLANEOUS PROVISIONS

13.1 GOVERNING LAW
Delete the remainder of the paragraph beginning after the word "located"

13.2 SUCCESSORS AND ASSIGNS

13.2.1 In the second sentence, Delete "Except as.....13.2.2,"

13.2.2 Delete paragraph.

13.4 RIGHTS AND REMEDIES

Add the following clause 13.4.3.
13.4.3 The 23rd Judicial District Court in and for the Parish of Ascension, State of Louisiana shall have sole and exclusive jurisdiction and venue in any action brought under or pertaining to this contract. All disputes between the parties shall be filed in the state court of Louisiana.
In the event of diversity for purposes of federal court jurisdiction or any other cause of action that may allow for federal court jurisdiction or venue, the Contractor, its surety, its Subcontractors and suppliers specifically waive any right or cause of action to be filed, transferred, removed, or tried in any federal court.

13.5 TESTS AND INSPECTIONS

13.5.1 In Subparagraph 13.5.1 delete the second sentence and substitute the following:
The Contractor shall make arrangements for such tests, inspections and approvals with the Testing Laboratory provided by the Owner, and the Owner shall bear all related costs of tests, inspections and approvals."

Delete the last sentence of Subparagraph 13.5.1.

13.6 INTEREST
Delete Paragraph 13.6.

13.7 TIME LIMITS ON CLAIMS
Delete paragraph 13.7. (See La. R.S. 38:2189)

13.8 Add 13.8 as follows:

13.8 PROGRESS AND COORDINATION MEETINGS

13.8.1 A Pre-Construction meeting shall be held prior to the start of the Work. The following shall be in attendance: Owner, Architect and Consultants, Contractor and Superintendent, major Sub-contractors and representatives of separate Contractors, when applicable. The Contractor shall submit to the Architect and Owner prior to or at the preconstruction meeting the following: (1) list of major Sub-contractors and their contact information, (2) a list of Sub-contractors' Superintendent and Project Manager with 24 hour phone numbers and (3) tentative (CPM) Construction Progress Schedule and submittal schedule. There will be no substitutions made to the Sub-Contractor List after submitting at the preconstruction meeting without written approval by Owner's Representative, after requested in writing by the Contractor.

13.8.2 Progress and coordination meetings will be held monthly on site or as charged in writing by the Owner or Architect. The Architect shall generate and distribute minutes of each meeting to all participants within seven (7) days of each meeting. The following are expected to attend: The Contractor represented by its Project Manager or principal, the Contractor's Project Superintendent, the Sub-contractors and material suppliers requested by the Owner or Architect.

ARTICLE 14
TERMINATION OR SUSPENSION OF THE CONTRACT

14.1 TERMINATION BY THE CONTRACTOR
Delete clause 14.1.1.4.

14.1.3 After the word "profit", add the following "for Work completed prior to stoppage". Add at the end of the sentence: The Contractor shall not be entitled to recover consequential damages or profit or overhead for any portion of the Work of the Contract that has not been performed.

14.2 TERMINATION BY THE OWNER FOR CAUSE
Add the following clause:

14.2.1.5 "Fails to complete the punch list within the lien period as provided in section 9.8."

14.2.3 Add the following sentence:
"Termination by the Owner shall not suspend assessment of liquidated damages against the surety."

14.2.3.1 Add the following:
Liquidated damages have been established and the termination by the Owner under this Article will not relieve the Contractor and/or Surety of their obligations under the liquidated damages provision of the Contract. The Contractor and/or Surety shall be liable to the Owner for per diem liquidated damages. Termination by the Owner shall not suspend assessment of liquidated damages against the Contractor or the Surety.

14.2.4 After the word "damages" in Line 2, add: *", including, but not limited to, liquidated or stipulated damages"*.

14.2.5 Add the following Subparagraph:
If an agreed sum of liquidated damages has been established, termination by the Owner under this Article will not relieve the Contractor and/or surety of his obligations under the liquidated damages provisions. The Contractor and/or surety shall be and remain liable to the Owner for per diem liquidated damages."

ARTICLE 15
CLAIMS AND DISPUTES

15.1 CLAIMS

15.1.1 In the first sentence of subparagraph 15.1.1, add the phrase "extension of time," after the word "money".

15.1.2 Add the following to the end of the paragraph:
The Initial Decision Maker (IDM) shall provide a written decision to the Contractor and the Owner within 21 days of receipt of the claim. The IDM may (1) approve the Claim or (2) reject the Claim in whole or part. The IDM's decision is final and binding on the parties but subject to litigation. A "Reservation of Rights" and similar stipulations shall not be recognized under this contract as having any effect. Any party making a claim must make a claim as defined herein within the time limits provided.

15.1.3 In the second sentence of the subparagraph, delete "the decisions of the Initial Decision Maker" and replace with "his/her decision".

15.1.5.1 Delete second sentence.

15.1.5.2 Delete paragraph 15.1.5.2 and substitute the following:
In planning the construction schedule within the agreed Contract Time, it shall be understood that the Contractor has anticipated the amount of adverse weather conditions normal to the Project site of the Work for the season or seasons of the year involved. Only those weather delays attributed to other than normal weather conditions will be considered by the Architect and Owner. If adverse weather conditions are the basis for a claim for additional time, the Contractor shall document that weather conditions had an adverse effect on the scheduled construction. Documentation must include National Weather Service reports, Daily Log Reports and general description of work planned, that could not be executed. Note that half days will be considered and the Contractor will be allowed consideration of time lost due cleaning the site. An increase in the contract time due to weather shall not be cause for an increase in the contract sum.

15.1.5.3 Add the following Subparagraph:
The following are considered reasonably anticipated days of adverse weather on a monthly basis:

January	11	days	May	5	days	September	4 days

February	10	days	June	6	days	October	3	days
March	8	days	July	6	days	November	5	days
April	7	days	August	5	days	December	8	days

Normal anticipated adverse rainfall as indicated above for the area of the Project site shall not be cause for an extension of the Contract Time. The Contractor shall anticipate the number of days specified above as a minimum number of days of rain per month with additional wet adverse work conditions following the above number of days of rainfall. The Contractor shall ask for total adverse weather days, the Contractor's request shall be considered only for days over the allowable number of days stated above.

Note: Contract is on a calendar day basis.

The Ascension Parish School Board has a strict policy for the reporting of claims for rain days. Board Meetings are scheduled on the first and third Tuesday of each month. All Contractor requests and documentation for extension in Time for rain or wet conditions for a particular month shall be delivered to the Architect promptly prior to the second Tuesday of the following month. (For example, for a claim for rain days in July, if the first day of August is on a Tuesday, the second Tuesday is August 8, hence, all requests for rain days in July would be delivered to the Architect on or prior to August 8. No consideration will be granted by the Owner for claims for rain days when the Contractor does not submit claims on time as specified above.

15.1.6 Claims for Consequential Damages
Delete this paragraph in its entirety.

15.2 INITIAL DECISION
Note that per this agreement, the ARCHITECT shall serve as the INITIAL DECISION MAKER.
15.2.1 In sentence two, delete the phrase, "unless otherwise indicated in the Agreement."

15.2.3 Delete the last sentence.

15.2.5 From the second sentence, delete the phrase, "and the Architect, if the Architect is not serving as the Initial Decision Maker"
15.2.5 At the end of the third sentence, change "binding dispute resolution" to "litigation".

15.2.6 Delete the phrase, "subject to the terms of Section 15.2.6.1."
15.2.6.1 Delete this section in its entirety.

15.2.8 Delete this section in its entirety.

15.3 MEDIATION
Delete and replace with:
15.3.1 Claims, disputes, or other matters in controversy arising out of or related to the Contract, except those waived as provided for in Sections 9.10.4 and 9.10.5, may be subject to mediation as a condition precedent to filing a lawsuit.

15.3.2 The parties may endeavor to resolve their Claims by mediation [non-binding] which, unless the parties mutually agree otherwise, shall be administered by a Mediation Service with offices in the parish of Ascension. A request for mediation shall be made in writing, delivered to the other party to the Contract, and filed with the person or entity administering the mediation. The parties shall share the mediator's fee and any filing fees equally. The mediation shall be held in the place where the Project is located, unless another location is mutually agreed upon.

15.4 ARBITRATION

15.4.1 Delete this section.

15.4.2 Delete this section.

15.4.3 Delete this section.

NOTE: Disputes arising under this contract are not subject to arbitration. The word arbitration in the contract documents is hereby deleted and revised/ changed to "litigation" wherever the word arbitration may be found.

15.4.4 CONSOLIDATION OR JOINDER

Delete sections 15.4.4.1 through 15.4.4.3 and replace with the following:.

15.4.4.1 The Owner, Architect, and Contractor grant to each other and to any other interested party all rights to joinder and consolidation that exist in the fact or law.

Add the following as Article 16:

ARTICLE 16
EQUAL OPPORTUNITY

16.1 The Contractor and all Subcontractors shall not discriminate against any employee or applicant for employment because of race, religion, color, sex, national origin or for any other reason. The Contractor shall take affirmative action to insure that applicants are employed, and that employees are treated during employment without regard to their race, religion, color, sex, or national origin. Such action shall include, but not be limited to the following: employment, upgrading, demotion, or transfer; recruitment or recruitment advertising; layoff or termination; rates of pay or other forms of compensation; and selection for training, including apprenticeship. The Contractor agrees to post in conspicuous places, available to employees and applicants for employment, notices setting forth the policies of nondiscrimination.

16.2 The Contractor and all Subcontractors shall, in all solicitations or advertisement for employees placed by them or on their behalf, state that all qualified applicants will receive consideration for employment without regard to race, religion, color, sex or national origin.

SCHEDULE OF VALUES

The Contractor is to use the following format. The total Contract Cost is to be itemized in each Subsection listed (as applicable)

	Item Cost	Cost
DIVISION 1 – GENERAL REQUIREMENTS		
01 00 00 General Requirements		
Bond & Insurance	_____	
Mobilization & Set up	_____	
General conditions, project superintendent	_____	
Temporary Facilities, Equipment rental	_____	
Demobilization & cleanup	_____	
DIVISION 1 – GENERAL REQUIREMENTS SUB-TOTAL		0
DIVISION 5 METALS		
05 52 00 Steel Railing	_____	
DIVISION 5 METALS SUB-TOTAL		0
DIVISION 6 WOOD, PLASTICS & COMPOSITES		
06 10 00 Rough Carpentry	_____	
06 40 00 Woodwork	_____	
06 64 00 FRP Panels	_____	
DIVISION 6 WOOD, PLASTICS & COMPOSITES SUB-TOTAL		0
DIVISION 7 THERMAL & MOISTURE PROTECTION		
07 21 00 Building Insulation		
07 41 00 Pre-finished Metal Roofing	_____	
DIVISION 7 THERMAL & MOISTURE PROTECTION SUB-TOTAL		0
DIVISION 9 FINISHES		
09 21 16 Gypsum Board Assemblies	_____	
09 51 00 Acoustical Tile Ceilings	_____	
09 65 00 Resilient Materials	_____	
09 90 00 Paint	_____	
DIVISION 9 FINISHES SUB-TOTAL		0
DIVISION 10 - SPECIALTIES		
10 44 00 Fire Extinguishers	_____	
DIVISION 10 - SPECIALTIES SUB-TOTAL		0
DIVISION 11 EQUIPMENT		
11 40 00 Food Service Equipment	_____	
DIVISION 11 EQUIPMENT SUB-TOTAL		0
DIVISION 21 - FIRE SUPPRESSION SYSTEMS		
21 13 00 Fire Suppression System	_____	
DIVISION 21 - FIRE SUPPRESSION SYSTEMS SUB-TOTAL		0

SCHEDULE OF VALUES

The Contractor is to use the following format. The total Contract Cost is to be itemized in each Subsection listed (as applicable)

	Item Cost	Cost
DIVISION 22 - PLUMBING		
22 05 00 Valves and Fittings		
22 07 00 Piping and Equipment Insulation		
22 11 00 Plumbing		
DIVISION 22 - PLUMBING SUB-TOTAL		0
DIVISION 23 - HVAC		
23 05 93 Testing and Balancing of Air and Hydronic Systems		
23 09 00 Building Temperature Control System		
23 30 00 Heating, Ventilation and Air Conditioning		
DIVISION 23 - HVAC SUB-TOTAL		0
DIVISION 26 – ELECTRICAL		
26 20 00 Electrical Service		
26 50 00 Lighting Fixtures		
DIVISION 26 – ELECTRICAL SUB-TOTAL		0
DIVISION 27 - COMMUNICATIONS		
27 05 00 Telecommunication System		
27 51 23 Intercom System		
27 53 13 Clock Systems		
DIVISION 27 - COMMUNICATIONS SUB-TOTAL		0
DIVISION 28 - ELECTRONIC SAFETY AND SECURITY		
28 30 00 Fire Alarm System		
DIVISION 28 - ELECTRONIC SAFETY AND SECURITY SUB-TOTAL		0
DIVISION 31 - EARTHWORK		
31 23 00 Earthwork		
DIVISION 31 - EARTHWORK SUB-TOTAL		0
DIVISION 32 - SITE IMPROVEMENTS		
32 13 00 Concrete Pavement		
32 31 13 Chain Link Fence		
32 93 00 Landscape		
DIVISION 32 - SITE IMPROVEMENTS SUB-TOTAL		0
GRAND TOTAL		0

SECTION 01 01 00 - BASIC REQUIREMENTS

PART 1 - GENERAL

1.1 GENERAL SUMMARY OF THE WORK

A. General Description: The Work described in these Contract Documents is for site preparation for modular buildings in an existing school campus.

B. Documents: The drawings and general provisions of the Contract, including the General and Supplementary Conditions and Division 1 Specification Sections, apply to all specifications sections throughout this Project Manual.

C. The Work will be constructed under a single prime contract.

1.2 CONTRACTOR USE OF FACILITY

A. Owner’s Property - The Site: Owner occupies and uses the surrounding campus and adjacent building facilities.
   1. Conduct construction operations to minimize disturbance and disruption.
   2. Do not enter existing adjacent building facilities that are not part of the work unless approved in advance by Owner.

B. Staging Area: An area adjacent to the building will be assigned to the Contractor for his use.
   1. Secure this area with fencing. Coordinate with Owner’s representative for exact limits of fence.

C. Restore and clean areas surrounding the building affected by the work and staging area to original condition, including replenishing lawns and landscaping.

D. Contractor is responsible for security and safety of his materials, equipment and temporary facilities as well as protection of Owner's existing facilities.

E. Safety Plan: Contractor’s responsibility. Contractor to maintain first aid kit on jobsite.

F. Parking: Park within the area assigned for construction work. Do not park on Owner’s parking areas.

1.3 OWNER’S CAMPUS AND BUILDING FACILITIES

A. Owner's Occupancy: Adjacent campus areas and existing buildings are to remain in Owner's use. Do not obstruct Owner’s roads and drives.

B. Utilities Services: Do not interrupt utility services to the occupied buildings.

1.4 COORDINATION

A. Coordinate scheduling, submittals, and Work of the various Sections of specifications to assure efficient and orderly sequence of installation of interdependent construction elements.

B. Verify utility requirement characteristics of operating equipment are compatible with building utilities.

1.5 PROTECTION OF INSTALLED WORK

A. Protect installed Work and existing facilities to remain. Repair, replace and restore damage(s) at no cost to Owner.

B. Before beginning of construction operations, inspect and photograph driveways and access to construction area jobsite. Portions of driveway, landscaping and existing improvements damaged by construction operations shall be repaired and replaced at Contractor's expense.

1.6 PROJECT MEETINGS

A. Pre-construction Conference: The Owner and Architect will schedule a pre-construction conference after notice of award. The Contractor shall be responsible to see that his subcontractors are in attendance. At this meeting, submit to the Architect and Owner the following:
1. List of subcontractors and material suppliers
2. Proposed Construction Progress Schedule
3. Emergency contact information.

B. Progress Meetings: Schedule and administer meetings throughout progress of the Work at monthly intervals coordinated with preparation of payment request. Require each entity to be properly represented to review adherence to schedule with respect to material delivery, work sequencing, hours of work and relevant matters in relationship to the progress schedule. Record minutes of the meeting, update the construction progress schedule, and submit with payment request.

1.7 SUBSTITUTIONS

A. Architect's Approval Required: Consideration will be given to submittals for substitutions only when such proposals are accompanied by complete technical data and information showing compliance to specified requirements. No substitutions are allowed without the Architect's approval.

B. "Approved Equal" and "or Equal": Substitution under this category may be submitted for consideration. See Instructions to Bidders.

C. Contractor shall verify and coordinate compatibility with related construction, accommodation to space/area provided, and clearances for service access for substitution items.

1.8 PRODUCT DELIVERY, STORAGE, AND HANDLING

A. General Product Requirements: Provide products that comply with the Contract Documents, that are undamaged, and unless otherwise indicated, that are new at time of installation.

B. Deliver, store, and handle products using means and methods that will prevent damage, deterioration, and loss, including theft. Comply with manufacturers' written instructions.

1. Schedule delivery to minimize long-term storage at Project site and to prevent overcrowding of construction spaces.
2. Coordinate delivery with installation time to ensure minimum holding time for items that are flammable, hazardous, easily damaged, or sensitive to deterioration, theft, and other losses.
3. Deliver products to Project site in an undamaged condition in manufacturer's original sealed container or other packaging system, complete with labels and instructions for handling, storing, unpacking, protecting, and installing.
4. Inspect products on delivery to ensure compliance with the Contract Documents and to ensure that products are undamaged and properly protected.
5. Store products to allow for inspection and measurement of quantity or counting of units.
6. Store materials in a manner that will not endanger Project structure.
7. Store products that are subject to damage by the elements, under cover in a weathertight enclosure above ground, with ventilation adequate to prevent condensation.
8. Comply with product manufacturer's written instructions for temperature, humidity, ventilation, and weather-protection requirements for storage.
9. Protect stored products from damage.

1.9 EXECUTION REQUIREMENTS

A. General: Locate the Work and components of the Work accurately, in correct alignment and elevation, as indicated.
   1. Make vertical work plumb and make horizontal work level.
   2. Where space is limited, install components to maximize space available for maintenance and ease of removal for replacement.

B. Comply with manufacturer's written instructions and recommendations for installing products in applications indicated.

C. Install products at the time and under conditions that will ensure the best possible results. Maintain conditions required for product performance until Substantial Completion.

D. Conduct construction operations so no part of the Work is subjected to damaging operations or loading in excess of that expected during normal conditions of occupancy.

E. Tools and Equipment: Do not use tools or equipment that produce harmful noise levels.

F. Joints: Make joints of uniform width. Where joint locations in exposed work are not indicated, arrange joints for the best visual effect. Fit exposed connections together to form hairline joints.

G. Hazardous Materials: Use products, cleaners, and installation materials that do not contain hazardous materials.

1.10 PROGRESS AND FINAL CLEANING

A. Keep areas free of waste materials, debris, and rubbish. Maintain site in a clean and orderly condition.

B. Clean site daily, and more often when waste materials and debris interfere with Owner's operations. When work occurs in areas occupied by Owner's personnel or operations, remove and clean scraps, debris, and excess materials as soon as they are generated.

C. Final Cleaning: Remove waste and surplus materials, rubbish, and construction facilities from the site. Clean surfaces and areas, new and existing, affected by Work and restore to condition before if damaged.

PART 2 - PRODUCTS

2.1 PROJECT SIGNAGE

A. Required Postings: Post construction permits and other postings as required by governmental authorities.

B. No other signs are permitted at or around the project site.

PART 3 - EXECUTION (not used)

END OF SECTION 01 01 00

SECTION 01 29 00 - PAYMENT PROCEDURES

PART 1 - GENERAL

1.1 SUMMARY

A. This Section specifies administrative and procedural requirements to prepare and process Applications for Payment.

1.2 DEFINITIONS

A. Schedule of Values: A statement furnished by Contractor allocating portions of the Contract Sum to various portions of the Work and used as the basis for reviewing Contractor's Applications for Payment.

1.3 SCHEDULE OF VALUES

A. Coordination: Coordinate preparation of the Schedule of Values with preparation of Contractor's Construction Schedule. Use the form provided.
   1. Correlate line items in the Schedule of Values with other required administrative forms and schedules, including the following:
      a. Application for Payment forms with Continuation Sheets.
      b. Submittals Schedule.
   2. Submit the Schedule of Values to Architect at earliest possible date but no later than 7 days before the date scheduled for submittal of initial Applications for Payment.

B. Format and Content: Use the Project Manual table of contents as a guide to establish line items for the Schedule of Values. Provide at least one line item for each Specification Section.
   1. Identification: Include the following Project identification on the Schedule of Values:
      a. Project name and location.
      b. Name of Architect.
      c. Architect's project number.
      d. Contractor's name and address.
      e. Date of submittal.
   2. Arrange the Schedule of Values in tabular form with separate columns to indicate the following for each item listed:
      a. Related Specification Section or Division.
      b. Description of the Work.
      c. Change Orders (numbers) that affect value.
      d. Dollar value.
   3. Provide a breakdown of the Contract Sum in enough detail to facilitate continued evaluation of Applications for Payment and progress reports. Coordinate with the Project Manual table of contents. Provide several line items for principal subcontract amounts, where appropriate.
   4. Round amounts to nearest whole dollar; total shall equal the Contract Sum.

5. Provide a separate line item in the Schedule of Values for each part of the Work where Applications for Payment may include materials or equipment purchased or fabricated and stored, but not yet installed.
   a. Differentiate between items stored on-site and items stored off-site. Include evidence of insurance or bonded warehousing if required.
6. Each item in the Schedule of Values and Applications for Payment shall be complete. Include total cost and proportionate share of general overhead and profit for each item.
   a. Temporary facilities and other major cost items that are not direct cost of actual work-in-place may be shown either as separate line items in the Schedule of Values or distributed as general overhead expense, at Contractor's option.
7. Schedule Updating: Update and resubmit the Schedule of Values before the next Applications for Payment when Change Orders or Construction Change Directives result in a change in the Contract Sum.

1.4 APPLICATIONS FOR PAYMENT

A. Each Application for Payment shall be consistent with previous applications and payments as certified by Architect and paid for by Owner.
   1. Initial Application for Payment, Application for Payment at time of Substantial Completion, and final Application for Payment involve additional requirements.
   2. Stored Materials: No payment will be made for materials and products stored anywhere off site, including a bonded warehouse.

B. Payment Application Times: The date for each progress payment is indicated in the AIA A201 General Conditions.

C. Payment Application Forms: Use AIA Document G702 and AIA Document G703 Continuation Sheets as form for Applications for Payment.

D. Application Preparation: Complete every entry on form. Notarize and execute by a person authorized to sign legal documents on behalf of Contractor. Architect will return incomplete applications without action.
   1. Entries shall match data on the Schedule of Values and Contractor's Construction Schedule. Use updated schedules if revisions were made.
   2. Include amounts of Change Orders and Construction Change Directives issued before last day of construction period covered by application.

E. Transmittal: Submit one original and 4 copies signed and notarized for each Application for Payment to Architect.

F. Initial Application for Payment: Administrative actions and submittals that must precede or coincide with submittal of first Application for Payment include the following:
   1. List of subcontractors.
   2. Schedule of Values.
   3. Contractor's Construction Schedule (preliminary if not final).
   4. Certificates of insurance and insurance policies.

G. Application for Payment at Substantial Completion: After issuing the Certificate of Substantial Completion, submit an Application for Payment showing 100 percent completion for portion of the Work claimed as substantially complete.
   1. Include documentation supporting claim that the Work is substantially complete and a statement showing an accounting of changes to the Contract Sum.
   2. This application shall reflect Certificates of Partial Substantial Completion issued previously for Owner occupancy of designated portions of the Work.

H. Prior to Final Application for Payment: The following items must be submitted:
   1. Warranties
   2. Operating and Maintenance Manuals
   3. Record Drawings

I. Final Payment Application: Submit final Application for Payment with releases and supporting documentation not previously submitted and accepted, including, but not limited, to the following:
   1. Insurance certificates for products and completed operations where required and proof that taxes, fees, and similar obligations were paid.
   2. Updated final statement, accounting for final changes to the Contract Sum.
   3. Lien-free certificate.
   4. AIA Document G707, "Consent of Surety to Final Payment."

PART 2 - PRODUCTS (Not Used)

PART 3 - EXECUTION (Not Used)

END OF SECTION 01 29 00

SECTION 01 33 00 - SUBMITTAL PROCEDURES

PART 1 - GENERAL

1.1 SUMMARY

A. This Section includes administrative and procedural requirements for Shop Drawings, Product Data, Samples, and other miscellaneous submittals.

1.2 DEFINITIONS

A. Action Submittals: Information that requires Architect's responsive action.

B. Informational Submittals: Information that does not require Architect's approval. Submittals may be rejected for not complying with requirements.

C. Portable Document Format (PDF): An open standard file format licensed by Adobe Systems used for representing documents in a device-independent and display resolution-independent fixed-layout document format.

D. Owner Requested Information: Written information that does not require Architect's review and approval. This information may be transmitted directly to the Owner.

1.3 ACTION SUBMITTALS

A. Submittal Schedule: Submit a schedule of submittals, arranged in chronological order by dates required by construction schedule. Include time required for review, ordering, manufacturing, fabrication, and delivery when establishing dates. Include additional time required for making corrections or revisions to submittals noted by Architect and additional time for handling and reviewing submittals required by those corrections.
   1. Coordinate submittal schedule with list of subcontracts, the schedule of values, and Contractor's construction schedule.
   2. Initial Submittal: Submit concurrently with startup construction schedule. Include submittals required during the first 60 days of construction. List those submittals required to maintain orderly progress of the Work and those required early because of long lead time for manufacture or fabrication.
   3. Final Submittal: Submit concurrently with the first complete submittal of Contractor's construction schedule.
      a. Submit revised submittal schedule to reflect changes in current status and timing for submittals.
   4. Format: Arrange the following information in a tabular format:
      a. Scheduled date for first submittal.
      b. Specification Section number and title.
      c. Submittal category: Action; informational.
      d. Name of subcontractor.
      e. Description of the Work covered.
      f. Scheduled date for Architect's final release or approval.
      g. Scheduled date of fabrication.
      h. Scheduled dates for purchasing.
      i. Scheduled dates for installation.

j. Activity or event number.

1.4 SUBMITTAL ADMINISTRATIVE REQUIREMENTS

A. Architect's Digital Data Files: Electronic digital data files of the Contract Drawings will be provided by Architect for Contractor's use in preparing submittals.
   1. Architect may furnish Contractor one set of digital data files of the Contract Drawings for use in preparing Shop Drawings.
   2. Architect makes no representations as to the accuracy or completeness of digital data drawing files as they relate to the Contract Drawings.

B. Coordination: Coordinate preparation and processing of submittals with performance of construction activities.
   1. Coordinate each submittal with fabrication, purchasing, testing, delivery, other submittals, and related activities that require sequential activity.
   2. Submit all submittal items required for each Specification Section concurrently unless partial submittals for portions of the Work are indicated on approved submittal schedule.
   3. Submit action submittals and informational submittals required by the same Specification Section as separate packages under separate transmittals.
   4. Coordinate transmittal of different types of submittals for related parts of the Work so processing will not be delayed because of need to review submittals concurrently for coordination.
      a. Architect reserves the right to withhold action on a submittal requiring coordination with other submittals until related submittals are received.

C. Processing Time: Allow time for submittal review, including time for resubmittals, as follows. Time for review shall commence on Architect's receipt of submittal. No extension of the Contract Time will be authorized because of failure to transmit submittals enough in advance of the Work to permit processing, including resubmittals.
   1. Initial Review: Allow 7 days for initial review of each submittal. Allow additional time if coordination with subsequent submittals is required. Architect will advise Contractor when a submittal being processed must be delayed for coordination.
   2. Intermediate Review: If intermediate submittal is necessary, process it in same manner as initial submittal.
   3. Resubmittal Review: Allow 7 days for review of each resubmittal.
   4. Sequential Review: Where sequential review of submittals by Architect's consultants, Owner, or other parties is indicated, allow 14 days for initial review of each submittal.

D. Paper Submittals: Place a permanent label or title block on each submittal item for identification.
   1. Indicate name of firm or entity that prepared each submittal on label or title block.
   2. Provide a space approximately 3 by 5 inches on label or beside title block to record Contractor's review and approval markings and action taken by Architect.
   3. Include the following information for processing and recording action taken:
      a. Project name.
      b. Date.
      c. Name of Architect.
      d. Name of Contractor.
      e. Name of subcontractor.

f. Name of supplier.
g. Name of manufacturer.
h. Number and title of appropriate Specification Section.
i. Drawing number and detail references, as appropriate.
j. Location(s) where product is to be installed, as appropriate.
k. Other necessary identification.

4. Additional Paper Copies: Unless additional copies are required for final submittal, and unless Architect observes noncompliance with provisions in the Contract Documents, initial submittal may serve as final submittal.
   a. Submit one copy of submittal to concurrent reviewer in addition to specified number of copies to Architect.
5. Transmittal for Paper Submittals: Assemble each submittal individually and appropriately for transmittal and handling. Transmit each submittal using a transmittal form. Architect will return without review submittals received from sources other than Contractor.
   a. Transmittal Form for Paper Submittals: Use AIA Document G810, CSI Form 12.1A, or Transmittal Form for Paper Submittals: Provide locations on form for the following information:
      1) Project name.
      2) Date.
      3) Name and address of Architect.
      4) Name of Contractor.
      5) Name of firm or entity that prepared submittal.
      6) Names of subcontractor, manufacturer, and supplier.
      7) Category and type of submittal.
      8) Specification Section number and title.
      9) Drawing number and detail references, as appropriate.
      10) Remarks.
      11) Signature of transmitter.

E. Electronic Submittals: Identify and incorporate information in each submittal file as follows:
1. Assemble complete submittal package into a single indexed file incorporating submittal requirements of a single Specification Section and transmittal form with links enabling navigation to each item.
2. Name file with submittal number or other unique identifier, including revision identifier.
   a. File name shall use project identifier and Specification Section number followed by a decimal point and then a sequential number (e.g., LNHS-061000.01). Resubmittals shall include an alphabetic suffix after another decimal point (e.g., LNHS-061000.01.A).
3. Provide means for insertion to permanently record Contractor's review and approval markings and action taken by Architect.
4. Transmittal Form for Electronic Submittals: Use format containing the following information:
   a. Project name.
   b. Date.
   c. Name and address of Architect.
   d. Name of Contractor.
   e. Name of firm or entity that prepared submittal.

f. Names of subcontractor, manufacturer, and supplier.
g. Category and type of submittal.
h. Specification Section number and title.
i. Drawing number and detail references, as appropriate.
j. Related physical samples submitted directly.
k. Other necessary identification.
l. Remarks.

F. Options: Identify options requiring selection by Architect.

G. Deviations and Additional Information: On an attached separate sheet, prepared on Contractor's letterhead, record relevant information, requests for data, revisions other than those requested by Architect on previous submittals, and deviations from requirements in the Contract Documents, including minor variations and limitations. Include same identification information as related submittal.

H. Resubmittals: Make resubmittals in same form and number of copies as initial submittal.
1. Note date and content of previous submittal.
2. Note date and content of revision in label or title block and clearly indicate extent of revision.
3. Resubmit submittals until they are marked with approval notation from Architect's action stamp.

I. Distribution: Furnish copies of final submittals to manufacturers, subcontractors, suppliers, fabricators, installers, authorities having jurisdiction, and others as necessary for performance of construction activities. Show distribution on transmittal forms.

J. Use for Construction: Retain complete copies of submittals on Project site. Use only final action submittals that are marked with approval notation from Architect's action stamp.

PART 2 - PRODUCTS

2.1 SUBMITTAL PROCEDURES

A. General: Prepare, review, mark approval, sign, date, and submit submittals required by individual Specification Sections.
1. Electronic Submittals: Submit via email as PDF electronic files.
a. Architect will return annotated file. Annotate and retain one copy of file as an electronic Project record document file.
2. Paper Submittals - Number of Copies: Copies for Contractor use, plus number below.
a. Architect will keep 2 copies of each submittal, unless otherwise indicated.
b. Contractor shall provide one copy to be kept at project site during construction.
c. Copy(s) as a Project Record Document and for Project Material Manual described elsewhere in Division 1.

B. Product Data: Collect information into a single submittal for each element of construction and type of product or equipment.

1. Mark each copy of each submittal to show which products and options are applicable.
2. Include the following information, as applicable:
   a. Manufacturer's catalog cuts.
   b. Manufacturer's product specifications.
   c. Standard color charts.
   d. Statement of compliance with specified referenced standards.
   e. Testing by recognized testing agency.
   f. Application of testing agency labels and seals.
   g. Notation of coordination requirements.
   h. Availability and delivery time information.
3. For equipment, include the following in addition to the above, as applicable:
   a. Wiring diagrams showing factory-installed wiring.
   b. Printed performance curves.
   c. Operational range diagrams.
   d. Clearances required to other construction, if not indicated on accompanying Shop Drawings.
4. Submit Product Data before or concurrent with Samples.

C. Shop Drawings: Prepare Project-specific information, drawn accurately to scale.
1. Preparation: Fully illustrate requirements in the Contract Documents.
2. Submit Shop Drawings either in PDF electronic format or paper copies.
3. Sheet Size: Except for templates, patterns, and similar full-size drawings, submit Shop Drawings on sheets at least 8-1/2 by 11 inches (215 by 280 mm), but no larger than 30 by 42 inches (750 by 1067 mm).

D. Samples: Submit Samples for review of kind, color, pattern, and texture for a check of these characteristics with other elements and for a comparison of these characteristics between submittal and actual component as delivered and installed.
1. Transmit Samples that contain multiple, related components such as accessories together in one submittal package.
2. Identification: Attach label on unexposed side of Samples that includes the following:
   a. Description of Sample.
   b. Product name and name of manufacturer.
   c. Sample source.
   d. Number and title of applicable Specification Section.
3. Disposition: Maintain sets of approved Samples at Project site, available for quality-control comparisons throughout the course of construction activity. Sample sets may be used to determine final acceptance of construction associated with each set.
   a. Samples that may be incorporated into the Work are indicated in individual Specification Sections. Such Samples must be in an undamaged condition at time of use.
   b. Samples not incorporated into the Work, or otherwise designated as Owner's property, are the property of Contractor.
4. Samples for Initial Selection: Submit manufacturer's color charts consisting of units or sections of units showing the full range of colors, textures, and patterns available.

a. Number of Samples: Submit one full set of available choices where color, pattern, texture, or similar characteristics are required to be selected from manufacturer's product line.

5. Samples for Verification: Submit full-size units or Samples of size indicated, prepared from same material to be used for the Work, and physically identical with material or product proposed for use, and that show full range of color and texture variations expected. Samples include, but are not limited to, the following: partial sections of manufactured or fabricated components; small cuts or containers of materials; complete units of repetitively used materials; swatches showing color, texture, and pattern; color range sets; and components used for independent testing and inspection.
   a. Number of Samples: Submit 2 sets of Samples. Architect will retain one Sample sets; remainder will be returned.
      1) Submit a single Sample where assembly details, workmanship, fabrication techniques, connections, operation, and other similar characteristics are to be demonstrated.
      2) If variation in color, pattern, texture, or other characteristic is inherent in material or product represented by a Sample, submit at least three sets of paired units that show approximate limits of variations.

2.2 INFORMATIONAL SUBMITTALS

A. General: Prepare and submit Informational Submittals indicated and upon request.
   1. Number of Copies: 2 copies, unless otherwise indicated. Architect will not return copies.

2.3 OWNER REQUESTED INFORMATION

A. General: Prepare and submit Owner requested information required.
   1. Number of Copies: Submit 2 copies of each Owner requested information, unless otherwise indicated.
   2. Architect will not review this information.
   3. This information will be transmitted directly to the Owner.

B. Owner Requested Information: This information may include -
   1. Material Safety and Data Sheets (MSDS) for posting.

PART 3 - EXECUTION

3.1 CONTRACTOR'S REVIEW

A. Contractor's Approval Required: Prior to transmitting submittals to the Architect, check for conformance to Contract Documents and indicate approval by dating, stamping and signing each copy of the shop drawings.
   1. Approval by Contractor must be indicated either by “Approved” or “Approved as noted”.
   2. This is a pre-condition to Architect's review and approval.

B. Approval Stamp: Stamp each submittal with a uniform, approval stamp. Include Project name and location, submittal number, Specification Section title and number, name of

reviewer, date of Contractor's approval, and statement certifying that submittal has been reviewed, checked, and approved for compliance with the Contract Documents.

3.2 ARCHITECT'S ACTION

A. General: Architect will not review submittals that do not bear Contractor's approval stamp and will return them without action.

B. Action Submittals: Architect will review each submittal, make marks to indicate corrections or modifications required, and return it. Architect will stamp each submittal with an action stamp and will mark stamp appropriately to indicate action taken.

C. Informational Submittals: Architect will review each submittal and will not return it, or will reject and return it if it does not comply with requirements. Architect will forward each submittal to appropriate party.

D. Incomplete and partial submittals are unacceptable, will be considered nonresponsive, and will be returned for resubmittal without review.

E. Submittals not required by the Contract Documents will not be reviewed and may be discarded.

END OF SECTION 01 33 00

SECTION 01 40 00 - QUALITY CONTROL REQUIREMENTS

PART 1 - GENERAL

1.1 SUMMARY

A. This Section includes administrative and procedural requirements for quality assurance and quality control.
   1. Testing and inspection services for the following will be paid by the Owner:
      a. Earthwork specified in Division 31.
         1) The Owner will pay for on-site compaction testing. Contractor shall pay for testing of imported fill materials.
      b. Concrete specified in Division 32.

B. Testing and inspecting services are required to verify compliance with requirements specified or indicated. These services do not relieve Contractor of responsibility for compliance with the Contract Document requirements.
   1. Specified tests, inspections, and related actions do not limit Contractor's quality-control procedures for compliance with the Contract Document requirements.
   2. Requirements for Contractor to provide quality-control services required by Architect, Owner, or authorities having jurisdiction are not limited by provisions of this Section.

1.2 DEFINITIONS

A. Quality-Assurance Services: Activities, actions, and procedures performed before and during execution of the Work to guard against defects and deficiencies and ensure that proposed construction complies with requirements.

B. Quality-Control Services: Tests, inspections, procedures, and related actions during and after execution of the Work to evaluate that completed construction complies with requirements. Services do not include contract enforcement activities performed by Architect.

C. Mockups: Full-size, physical example assemblies to illustrate finishes and materials. Mockups are used to verify selections made under Sample submittals, to demonstrate aesthetic effects and, where indicated, qualities of materials and execution, and to review construction, coordination, testing, or operation; they are not Samples. Mockups establish the standard by which the Work will be judged.

D. Testing Agency: An entity engaged to perform specific tests, inspections, or both. Testing laboratory shall mean the same as testing agency.

1.3 SUBMITTALS

A. Reports: Prepare and submit certified written reports that include the following:
   1. Date of issue.
   2. Project title and number.
   3. Name, address, and telephone number of testing agency.
   4. Dates and locations of samples and tests or inspections.

5. Names of individuals making tests and inspections.
6. Description of the Work and test and inspection method.
7. Identification of product and Specification Section.
8. Complete test or inspection data.
9. Test and inspection results and an interpretation of test results.
10. Ambient conditions at time of sample taking and testing and inspecting.
11. Comments or professional opinion on whether tested or inspected Work complies with the Contract Document requirements.
12. Name and signature of laboratory inspector.
13. Recommendations on retesting and re-inspecting.

1.4 QUALITY ASSURANCE

A. Testing Agency Qualifications: An agency with the experience and capability to conduct testing and inspecting indicated, as documented by ASTM E 548, and that specializes in types of tests and inspections to be performed. This includes the Owner's testing agencies. Failure to do so will not be grounds for time extensions.

1.5 QUALITY CONTROL

A. Contractor Responsibilities: Unless otherwise indicated, Contractor shall pay for and provide quality-control services specified and required by authorities having jurisdiction.
   1. Notify testing agencies sufficiently in advance of time when Work that requires testing or inspecting will be performed. (This includes the Owner's testing agencies. Failure to do so will not be grounds for time extensions.)
   2. Submit a certified written report, in duplicate, of each quality-control service.
   3. Testing and inspecting requested by Contractor and not required by the Contract Documents are Contractor's responsibility.
   4. Submit additional copies of each written report directly to authorities having jurisdiction, when they so direct.

B. Manufacturer's Field Services: Where indicated, engage a factory-authorized service representative to inspect field-assembled components and equipment installation, including service connections. Report results in writing.

C. Retesting/Re-inspecting: Regardless of whether original tests or inspections were Contractor's responsibility, provide quality-control services, including retesting and re-inspecting, for construction that revised or replaced Work that failed to comply with requirements established by the Contract Documents.

D. Testing Agency Responsibilities: Cooperate with Architect and Contractor in performance of duties. Provide qualified personnel to perform required tests and inspections.
   1. Notify Architect and Contractor promptly of irregularities or deficiencies observed in the Work during performance of its services.
   2. Interpret tests and inspections and state in each report whether tested and inspected work complies with or deviates from requirements.
   3. Submit a certified written report, in duplicate, of each test, inspection, and similar quality-control service through Contractor.
   4. Do not release, revoke, alter, or increase requirements of the Contract Documents or approve or accept any portion of the Work.
   5. Do not perform any duties of Contractor.

E. Associated Services: Cooperate with agencies performing required tests, inspections, and similar quality-control services, and provide reasonable auxiliary services as requested. Notify agency sufficiently in advance of operations to permit assignment of personnel. Provide the following:
   1. Access to the Work.
   2. Incidental labor and facilities necessary to facilitate tests and inspections.
   3. Adequate quantities of representative samples of materials that require testing and inspecting. Assist agency in obtaining samples.
   4. Facilities for storage and field-curing of test samples.
   5. Delivery of samples to testing agencies.
   6. Preliminary design mix proposed for use for material mixes that require control by testing agency.
   7. Security and protection for samples and for testing and inspecting equipment at Project site.

F. Coordination: Coordinate sequence of activities to accommodate required quality-assurance and quality-control services with a minimum of delay and to avoid necessity of removing and replacing construction to accommodate testing and inspecting.
   1. Schedule times for tests, inspections, obtaining samples, and similar activities.

PART 2 - PRODUCTS (Not Used)

PART 3 - EXECUTION

3.1 REPAIR AND PROTECTION

A. General: On completion of testing, inspecting, sample taking, and similar services, repair damaged construction and restore substrates and finishes.
   1. Provide materials and comply with installation requirements specified in other Sections of these Specifications. Restore patched areas and extend restoration into adjoining areas in a manner that eliminates evidence of patching.
   2. Comply with requirements for Division 1 Section "Cutting and Patching."

B. Protect construction exposed by or for quality-control service activities.

C. Repair and protection are Contractor's responsibility, regardless of the assignment of responsibility for quality-control services.

END OF SECTION 01 40 00

SECTION 01 50 00 - TEMPORARY FACILITIES AND CONTROLS

PART 1 - GENERAL

1.1 SUMMARY

A. This Section includes requirements for temporary facilities and controls, including temporary utilities, support facilities, and security and protection facilities.

B. Temporary utilities include, but are not limited to, the following:
1. Temporary piping and connections to existing water service and distribution.
2. Sanitary facilities, including toilets and drinking-water facilities.
3. Ventilation.
4. Electrical Service and Lighting.
5. Telephone service.

C. Support facilities include, but are not limited to, the following:
1. Waste disposal facilities.
2. Field offices (optional)
3. Temporary signs.
4. Storage and fabrication sheds.
5. Lifts and hoists.
6. Construction aids and miscellaneous services and facilities.

D. Security and protection facilities include, but are not limited to, the following:
1. Tree and plant protection.
2. Enclosure fence and gates for staging areas.
3. Barricades, warning signs, and lights.
4. Temporary enclosures - weather, noise and dust protection.
5. Fire protection.
6. Staging areas.
7. Project

1.2 UTILITY USE CHARGES

A. Utility Services: Use water and electricity from Owner's existing systems without metering and without payment of use charges.

1.3 QUALITY ASSURANCE

A. Standards: Comply with ANSI A10.6, NECA's "Temporary Electrical Facilities," and NFPA 241.
1. Electric Service: Comply with NECA, NEMA, and UL standards and regulations for temporary electric service. Install service to comply with NFPA 70.

1.4 PROJECT CONDITIONS

A. Conditions of Use: The following conditions apply to use of temporary services and facilities by all parties engaged in the Work:
1. Keep temporary services and facilities clean and neat.

2. Do not use Owner's dumpsters for waste disposal.

PART 2 - PRODUCTS

2.1 MATERIALS

A. General: Provide new materials. Undamaged, previously used materials in good serviceable condition may be used if approved by Architect. Provide materials suitable for use intended. Lumber and Plywood: Comply with requirements in Division 6 Section "Rough Carpentry."

B. Lumber and Plywood: Comply with requirements in Division 6 Section "Rough Carpentry."

C. Tarpaulins: Fire-resistive labeled with flame-spread rating of 15 or less.

D. Water: Potable.

E. Temporary Fencing: One of the following at Contractor’s option -
   1. Chain-Link Fencing: Minimum 2-inch (50-mm), 0.148-inch- (3.76-mm-) thick, galvanized steel, chain-link fabric fencing; minimum 6 feet (1.8 m) high with galvanized steel pipe posts; minimum 2-3/8-inch- (60-mm-) OD line posts and 2-7/8-inch- (73-mm-) OD corner and pull posts, with 1-5/8-inch- (42-mm-) OD top rails.
   2. Portable Chain-Link Fencing: Minimum 2-inch (50-mm) 9-gage, galvanized steel, chain-link fabric fencing; minimum 6 feet (1.8 m) high with galvanized steel pipe posts; minimum 2-3/8-inch- (60-mm-) OD line posts and 2-7/8-inch- (73-mm-) OD corner and pull posts, with 1-5/8-inch- (42-mm-) OD top and bottom rails. Provide concrete or galvanized steel bases for supporting posts.

2.2 EQUIPMENT

A. General: Provide equipment suitable for use intended.

B. Temporary Field Office(s): Not mandatory, to be provided at Contractor’s option. Prefabricated or mobile units with lockable entrances, operable windows and serviceable finishes; with window or wall-mount type heating and air-conditioned units.

C. Fire Extinguishers: Hand carried, portable, UL rated. Class and extinguishing agent as indicated or a combination of extinguishers of NFPA-recommended classes for exposures.
   1. Comply with NFPA 10 and NFPA 241 for classification, extinguishing agent, and size required by location and class of fire exposure.

D. Self-Contained Toilet Units: Single-occupant units of chemical, aerated recirculation, or combustion type; vented; fully enclosed with a glass-fiber-reinforced polyester shell or similar nonabsorbent material.

E. Drinking-Water Fixtures: Containerized, tap-dispenser, bottled-water drinking-water units, including paper cup supply.

F. Dumpster: Size appropriate for construction waste and debris generated. Unit with lid to prevent wind action from blowing trash and debris. Provide at approved location for waste containment and collection.

2.3 SIGN

A. Bulletin Board: Protected from weather. As required for posting signs and notices required by authorities having jurisdiction.

B. Directional & Informational Signs: As required for directing construction traffic, and detour/redirecting traffic.

C. Prohibited Signs & Messages: All other signs, such as signs for advertising purposes indicating installer, sub-contractor and supplier entities, are prohibited.

PART 3 - EXECUTION

3.1 INSTALLATION, GENERAL

A. Locate facilities where they will serve Project adequately and result in minimum interference with performance of the Work. Relocate and modify facilities as required.

B. Provide each facility ready for use when needed to avoid delay. Maintain and modify as required.

3.2 TEMPORARY UTILITY INSTALLATION

A. Water Service: Use Owner's existing water service, as long as facilities and maintained in a condition acceptable to Owner.
   1. Provide water hoses.
   2. Use water distribution piping of sizes and pressures adequate for intended use. Connect to existing building hose bibb connections.
   3. Where special “key” operation is required, obtain key from Owner. Do not use pliers or other tools to operate hose bibb as it will damage the existing device.

B. Sanitary Facilities - Toilets: Install self-contained toilet units. Use of Owner's existing toilet facilities is not permitted.
   1. Supplies: Provide toilet tissue and similar disposable materials for each facility. Maintain adequate supply.

C. Drinking-Water Facilities: Bottled-water, drinking-water units.
   1. Supplies: Provide paper cups and similar disposable materials. Maintain adequate supply. Provide covered waste containers for disposal of used material.

D. Heating and Cooling: Provide temporary heating and cooling required by construction activities for curing or drying of completed installations or for protecting installed construction from adverse effects of low temperatures or high humidity. Select equipment from that specified that will not have a harmful effect on completed installations or elements being installed.

E. Ventilation and Humidity Control: Provide temporary ventilation required by construction activities for curing or drying of completed installations or for protecting installed construction from adverse effects of high humidity. Select equipment from that specified that will not have a harmful effect on completed installations or elements being installed. Coordinate ventilation requirements to produce ambient condition required and minimize energy consumption.

F. Electric Power Service:
   1. Provide temporary conductors and connections to building electric power service.
   2. Provide waterproof connectors to connect separate lengths of electrical power cords if single lengths will not reach areas where construction activities are in progress. Do not exceed safe length-voltage ratio.

G. Lighting: Provide temporary lighting with local switching that provides adequate illumination for construction operations and traffic conditions.

H. Communications - Jobsite: Do not use Owner's telephone(s) at the facility. Provide, maintain and pay for communications during entire period of construction operations. Provide cellular phone (for Contractor and Contractor's project superintendent) at jobsite.

3.3 SUPPORT FACILITIES INSTALLATION

A. General
   1. Locate field offices, storage sheds, sanitary facilities, and other temporary construction and support facilities for easy access.
   2. Maintain support facilities until near Substantial Completion. Remove before Substantial Completion. Personnel remaining after Substantial Completion will be permitted to use permanent facilities, under conditions acceptable to Owner.

B. Temporary Signs
   1. Prepare temporary signs to provide directional information to construction personnel and visitors.
   2. Provide temporary bulletin board, with protection from weather, for posting signs and notices required by authorities having jurisdiction.
   3. No other signs are permitted.

C. Dumpster(s) - Collection and Disposal of Waste: Collect waste regularly. Do not allow materials to overflow resulting in poor housekeeping measures. Dispose waste materials offsite, in a lawful manner.

D. Field Office: At Contractor's option, provide an insulated, weathertight, air-conditioned field office for use as a common facility by all personnel engaged in construction activities; of sufficient size to accommodate required office personnel and meetings at Project site. Keep office clean and orderly.

E. Storage and Fabrication Sheds: Sized, furnished, and equipped to accommodate materials and equipment involved, including temporary utility services. Locate within staging area on-site.

F. Lifts and Hoists: Provide facilities for hoisting materials and personnel. Truck cranes and similar devices used for hoisting materials are considered "tools and equipment" and not temporary facilities.

3.4 STAGING AREAS

A. General: Staging areas will be assigned by the Owner. There are 2 types of staging areas - Main and Sub-staging areas.
   1. Enclose staging areas with temporary fencing and gate enclosures appropriately sized of access.
   2. Contractor is solely responsible for security, protection, safeguards, etc. of materials and personnel within staging area(s).

B. Main Staging Area: Primary staging area for field office, sheds, equipment and material storage, and other items normally used during the entire Contract Period.

C. Sub-staging Areas: Locate in proximity of a particular portion of the work.

3.5 SECURITY AND PROTECTION FACILITIES INSTALLATION

A. Environmental Protection: Provide protection, operate temporary facilities, and conduct construction in ways and by methods that comply with environmental regulations and that minimize possible air, waterway, and subsoil contamination or pollution or other undesirable effects. Avoid using tools and equipment that produce harmful noise. Restrict use of noisemaking tools and equipment to hours that will minimize complaints from persons or firms near Project site.

B. Rainwater Runoff Control: Prevent water runoff from rains into the building.

C. Tree and Plant Protection: Do not place materials within the drip line of trees. Protect vegetation from construction damage.

D. Enclosure Fence – Work and Staging Areas: Before construction operations begin, install chain-link enclosure fence with lockable entrance gates.
   1. Provide gates in sizes and at locations necessary to accommodate delivery vehicles and other construction operations.

E. Barricades, Warning Signs, and Lights: Comply with standards and code requirements for erecting structurally adequate barricades. Paint with appropriate colors, graphics, and warning signs to inform personnel and public of possible hazard. Where appropriate and needed, provide lighting, including flashing red or amber lights.

F. Temporary Protections Near Building Entrance/Exit Doors: During roof work at and near these locations, erect structurally adequate, protective, covered walkway for passage of persons at these locations. Comply with regulations of authorities having jurisdiction.
   1. Provide protective plywood enclosure walls, framing, barricades, warning signs, lights, safe and well-drained walkways, and similar provisions for protection and safe passage.

G. Temporary Enclosures: Provide temporary enclosures for protection of construction, in progress and completed, from exposure, foul weather, other construction operations, and similar activities.
   1. Provide temporary weathertight enclosure over roof openings.
   2. Provide temporary partitions to separate areas of work generating dust and noise, from owner staff occupied areas.
   3. Horizontal Openings: Close openings in floor or roof decks and horizontal surfaces with load-bearing, wood-framed construction.
   4. Install tarpaulins securely using fire-retardant-treated wood framing and other materials.

H. Temporary Fire Protection: Comply with NFPA 241.
   1. Provide fire extinguishers, visible and accessible from space being served.
      a. Field Offices: Class A stored-pressure water-type extinguishers.
      b. Other Locations: Class ABC dry-chemical extinguishers or a combination of extinguishers of NFPA-recommended classes for exposures.
      c. Roofing Operations: See Division 7 section on roofing.
   2. Store combustible materials in containers in fire-safe locations.
   3. Maintain unobstructed access to fire extinguishers, fire hydrants, and access routes for firefighting. Prohibit smoking in hazardous fire-exposure areas.
   4. Supervise welding operations, temporary heating units, and similar sources of fire ignition.
   5. Develop and supervise an overall fire-prevention and first-aid fire-protection program for personnel at Project site.

3.6 OPERATION, TERMINATION, AND REMOVAL

A. Maintenance: Maintain facilities in good operating condition until removal.

B. Termination and Removal: Remove each temporary facility when need for its service has ended, when it has been replaced by authorized use of a permanent facility, or no later than Substantial Completion. Complete and restore permanent construction. Repair damaged Work, clean exposed surfaces, and replace construction that cannot be satisfactorily repaired.
   1. Materials and facilities that constitute temporary facilities are the property of Contractor.
   2. At Substantial Completion, clean and restore permanent facilities used during construction period. Comply with final cleaning requirements in Division 1 Section "Closeout Procedures."

END OF SECTION 01 50 00

SECTION 01 73 00 - CUTTING AND PATCHING

PART 1 - GENERAL

1.1 SUMMARY

A. This Section includes procedural requirements for cutting and patching.

B. Cut and patch existing construction to accommodate new construction. Include also, temporary removal, storage and re-installation of existing components as required to accomplish the work.

1.2 DEFINITIONS

A. Cutting: Removal of existing construction necessary to permit installation or performance of other Work.

B. Patching: Fitting and repair work required to restore surfaces to original conditions after installation of other Work.

1.3 QUALITY ASSURANCE

A. Structural Elements: Do not cut and patch structural elements in a manner that could change their load-carrying capacity or load-deflection ratio.

B. Operational Elements: Do not cut and patch operating elements and related components in a manner that results in reducing their capacity to perform as intended or that results in increased maintenance or decreased operational life or safety.

C. Visual Requirements: Do not cut and patch construction in a manner that results in visual evidence of cutting and patching. Do not cut and patch construction in a manner that would, in Architect's opinion, reduce the building's aesthetic qualities. Remove and replace construction that has been cut and patched in a visually unsatisfactory manner.

PART 2 - PRODUCTS

2.1 MATERIALS

A. General: Comply with requirements specified in other Sections of these Specifications.

B. Existing Materials: Use materials identical to existing materials. For exposed surfaces, use materials that visually match existing adjacent surfaces to the fullest extent possible.
   1. If identical materials are unavailable or cannot be used, use materials that, when installed, will match the visual and functional performance of existing materials.

PART 3 - EXECUTION

3.1 EXAMINATION

A. Examine surfaces to be cut and patched and conditions under which cutting and patching are to be performed.
   1. Compatibility: Before patching, verify compatibility with and suitability of substrates, including compatibility with existing finishes or primers.
   2. Proceed with installation only after unsafe or unsatisfactory conditions have been corrected.

3.2 PREPARATION

A. Temporary Support: Provide temporary support of Work to be cut.

B. Protection: Protect existing construction during cutting and patching to prevent damage. Provide protection from adverse weather conditions for portions of Project that might be exposed during cutting and patching operations.

C. Adjoining Areas: Avoid interference with use of adjoining areas or interruption of free passage to adjoining areas.

D. Existing Services: Where existing services are required to be removed, relocated, or abandoned, bypass such services before cutting to avoid interruption of services to occupied areas.

3.3 PERFORMANCE

A. General: Employ skilled workers to perform cutting and patching. Proceed with cutting and patching at the earliest feasible time, and complete without delay.
   1. Cut existing construction to provide for installation of other components or performance of other construction, and subsequently patch as required to restore surfaces to their original condition.

B. Cutting: Cut existing construction by sawing, drilling, breaking, chipping, grinding, and similar operations, including excavation, using methods least likely to damage elements retained or adjoining construction. If possible, review proposed procedures with original Installer; comply with original Installer's written recommendations.
   1. In general, use hand or small power tools designed for sawing and grinding, not hammering and chopping. Cut holes and slots as small as possible, neatly to size required, and with minimum disturbance of adjacent surfaces. Temporarily cover openings when not in use.
   2. Existing Finished Surfaces: Cut or drill from the exposed or finished side into concealed surfaces.
   3. Mechanical and Electrical Services: Cut off pipe or conduit in walls or partitions to be removed. Cap, valve, or plug and seal remaining portion of pipe or conduit to prevent entrance of moisture or other foreign matter after cutting.

C. Patching: Patch construction by filling, repairing, refinishing, closing up, and similar operations following performance of other Work. Patch with durable seams that are as in-

visible as possible. Provide materials and comply with installation requirements specified in other Sections of these Specifications.

1. Exposed Finishes: Restore exposed finishes of patched areas and extend finish restoration into retained adjoining construction in a manner that will eliminate evidence of patching and refinishing.

END OF SECTION 01 73 00

SECTION 01 77 00 - CLOSEOUT PROCEDURES

PART 1 - GENERAL

1.1 SUMMARY

A. This Section includes administrative and procedural requirements for contract closeout, including, but not limited to, the following:
   1. Inspection procedures.
   2. Project Record Documents.
   3. Final cleaning.

1.2 LIST OF INCOMPLETE ITEMS (PUNCH LIST)

A. Submit normal correspondence format, on Contractor’s letterhead appropriately dated and referenced (project name). Include name and identification of each space and area affected by construction operations for incomplete items and items needing correction including, if necessary, areas disturbed by Contractor that are outside the limits of construction.

1.3 SUBSTANTIAL COMPLETION

A. Preliminary Procedures: Before requesting inspection for determining date of Substantial Completion, complete the following.
   1. Prepare a list of items to be completed and corrected (punch list), the value of items on the list, and reasons why the Work is not complete.
   2. Terminate and remove temporary facilities from Project site, along with construction tools, and similar elements.
   3. Complete final cleaning requirements.
   4. Touch up, repair and restore marred areas and exposed finishes to eliminate visual defects caused by construction operations.

B. Inspection: Submit a written request for inspection for Substantial Completion. On receipt of request, Architect will either proceed with inspection or notify Contractor of unfulfilled requirements. Architect will prepare the Certificate of Substantial Completion after satisfactory inspection, or will notify Contractor of items, either on Contractor's list or additional items identified by Architect, that must be completed or corrected before certificate will be issued.
   1. Re-inspection: Request re-inspection when the Work identified in previous inspections as incomplete is completed or corrected.
   2. Results of completed inspection will form the basis of requirements for Final Completion.

1.4 FINAL COMPLETION

A. Preliminary Procedures: Before requesting final inspection for determining date of Final Completion, complete the following:
   1. Submit a final Application for Payment according to Division 1 Section "Payment Procedures."

2. Submit written statement that Substantial Completion inspection List of Incomplete Items (punch list) have been completed or otherwise resolved for acceptance with explanation therein.
3. Submit required documentation indicated elsewhere in these Contract Documents.

B. Inspection: Submit a written request for final inspection for acceptance. On receipt of request, Architect will either proceed with inspection or notify Contractor of unfulfilled requirements. Architect will prepare a final Certificate for Payment after inspection or will notify Contractor of construction that must be completed or corrected before certificate will be issued.
   1. Re-inspection: Request re-inspection when the Work identified in previous inspections as incomplete is completed or corrected.

1.5 PROJECT RECORD DOCUMENTS

A. General: Do not use Project Record Documents for construction purposes. Protect from deterioration and loss. Provide access to Project Record Documents for Architect's reference during normal working hours.

B. Record Drawings: Maintain and submit one set of Contract Drawings and Shop Drawings.
   1. Mark Record Drawings to show the actual installation where installation varies from that shown originally.
      a. Give particular attention to information on concealed elements that cannot be readily identified and recorded later.
      b. Record data as soon as possible after obtaining it, and not later 24-hours after receiving information. Record and check the markup before enclosing concealed installations.
      c. Mark Contract Drawings or Shop Drawings, whichever is most capable of showing actual physical conditions, completely and accurately. Where Shop Drawings are marked, show cross-reference on Contract Drawings.
   2. Mark with erasable, red-colored pencil. Use other colors to distinguish between changes for different categories of the Work at the same location.

PART 2 - PRODUCTS (not used)

PART 3 - EXECUTION

3.1 FINAL CLEANING

A. General: Provide final cleaning. Conduct cleaning and waste-removal operations to comply with local laws and ordinances, and Federal and local environmental and anti-pollution regulations.
   1. Leave Project clean in condition same as prior to beginning of construction operations.

B. Cleaning: Complete the following cleaning operations before requesting inspection for certification of Substantial Completion:

1. Clean Project site, yard, and grounds, in areas disturbed by construction activities, of rubbish, waste material, litter, and other foreign substances.
2. Restore site, fill in depressions, wheel ruts and fine grade property affected by construction traffic and temporary facilities during construction operations.
3. Traverse site areas affected by construction operations with metal detector(s) to remove fasteners and residual metal debris.
4. Sweep and clean entire building. Remove petrochemical spills, stains, and other foreign deposits.
5. Remove tools, construction equipment, machinery, and surplus material from Project site.
6. Touch up and otherwise repair and restore marred surfaces affected by construction operations.

C. Do not burn waste materials. Do not bury debris or excess materials on Owner's property. Do not discharge volatile, harmful, or dangerous materials into drainage systems. Remove waste materials from Project site and dispose of lawfully.

END OF SECTION 01 77 00

SECTION 02 41 15 - SELECTIVE DEMOLITION

PART 1 - GENERAL

1.1 SUMMARY

A. Selective demolition includes removal of existing items indicated and required for installation of new work, relocation and protection of existing facilities.
   1. This section also includes repair procedures for selective demolition operations.

1.2 DEFINITIONS

A. Remove: Detach items from existing construction and legally dispose of them off-site, unless indicated to be removed and salvaged or removed and reinstalled.

B. Remove and Reinstall: Detach items from existing construction, prepare them for reuse, and reinstall them where indicated.

C. Existing to Remain: Existing items of construction that are not to be removed and that are not otherwise indicated to be removed, removed and salvaged, or removed and reinstalled.

1.3 MATERIALS OWNERSHIP

A. Except for items or materials indicated to be reused, salvaged, reinstalled, or otherwise indicated to remain Owner's property, demolished materials shall become Contractor's property and shall be removed from Project site.

1.4 PROJECT CONDITIONS

A. Owner will occupy portions of the facility immediately adjacent to selective demolition areas. Conduct selective demolition so Owner's operations will not be disrupted.

B. Maintain access to existing walkways, corridors, and other adjacent occupied or used facilities.
   1. Do not close or obstruct walkways, corridors, or other occupied or used facilities without written permission from authorities having jurisdiction.

C. Owner assumes no responsibility for condition of areas to be selectively demolished.

D. Storage or sale of removed items or materials on-site will not be permitted.

E. Asbestos: It is not anticipated that there are hazardous materials in the areas of work.
   1. If suspected hazardous materials are encountered, do not disturb. Immediately notify Architect and Owner. Hazardous materials will be removed by Owner under a separate contract.

F. Utility Service: Maintain existing utilities indicated to remain in service and protect them against damage during selective demolition operations.

PART 2 - PRODUCTS

2.1 REPAIR MATERIALS

A. Use repair materials identical to existing materials.
   1. If identical materials are unavailable or cannot be used for exposed surfaces, use materials that visually match existing adjacent surfaces to the fullest extent possible.
   2. Use materials whose installed performance equals or surpasses that of existing materials.

B. Comply with material and installation requirements specified in individual Specification Sections.

2.2 MATERIALS – SALVAGE

A. Do not reuse materials removed from the existing construction in connection with demolition work, except items which are specifically shown or specified to be reused and/or relocated.

B. Remove and deliver equipment and material selected to remain the property of the Owner to a location on the grounds designated.

PART 3 - EXECUTION

3.1 EXAMINATION

A. Survey existing conditions and correlate with requirements indicated to determine extent of selective demolition required.

B. Inventory and record the condition of items to be removed and reinstalled and items to be removed and salvaged.

C. When unanticipated mechanical, electrical, or structural elements that conflict with intended function or design are encountered, investigate and measure the nature and extent of conflict. Promptly submit a written report to Architect.

3.2 UTILITY SERVICES

A. Existing Utilities: Maintain existing services indicated to remain and protect them against damage during selective demolition operations.

B. Do not interrupt existing utilities serving occupied or operating facilities unless authorized in writing by Owner and authorities having jurisdiction.
   1. Provide at least 48 hours' notice to Owner if shutdown of service is required during changeover.

C. Utility Requirements: Locate, identify, disconnect, and seal or cap off indicated utilities serving areas to be selectively demolished.

1. If utility services are required to be removed, relocated, or abandoned, before proceeding with selective demolition provide temporary utilities that bypass area of selective demolition and that maintain continuity of service to other parts of building.
2. Cut off pipe or conduit in walls or partitions to be removed. Cap, valve, or plug and seal remaining portion of pipe or conduit after bypassing.

3.3 PREPARATION

A. Temporary Facilities: Provide temporary barricades and other protection required to prevent injury to people and damage to adjacent buildings and facilities to remain.
   1. Provide protection to ensure safe passage of people around selective demolition area and to and from occupied portions of building.
   2. Protect walls, ceilings, floors, and other existing finish work that are to remain or that are exposed during selective demolition operations.

3.4 POLLUTION CONTROLS

A. Dust Control: Use water mist, temporary enclosures, and other suitable methods to limit spread of dust and dirt.
   1. Do not use water when it may damage existing construction or create hazardous or objectionable conditions, such as ice, flooding, and pollution.

B. Disposal: Remove and transport debris in a manner that will prevent spillage on adjacent surfaces and areas.

C. Cleaning: Clean adjacent structures and improvements of dust, dirt, and debris caused by selective demolition operations. Return adjacent areas to condition existing before selective demolition operations began.

3.5 SELECTIVE DEMOLITION

A. General: Demolish and remove existing construction only to the extent required by new construction and as indicated. Use methods required to complete the Work within limitations of governing regulations and as follows:
   1. Neatly cut openings and holes plumb, square, and true to dimensions required. Use cutting methods least likely to damage construction to remain or adjoining construction. Use hand tools or small power tools designed for sawing or grinding, not hammering and chopping, to minimize disturbance of adjacent surfaces. Temporarily cover openings to remain.
   2. Cut or drill from the exposed or finished side into concealed surfaces to avoid marring existing finished surfaces.
   3. Do not use cutting torches until work area is cleared of flammable materials. At concealed spaces, such as duct and pipe interiors, verify condition and contents of hidden space before starting flame-cutting operations. Maintain fire watch and portable fire-suppression devices during flame-cutting operations.
   4. Maintain adequate ventilation when using cutting torches.
   5. Locate selective demolition equipment and remove debris and materials so as not to impose excessive loads on supporting walls, floors, or framing.
   6. Dispose of demolished items and materials promptly.

7. Return elements of construction and surfaces that are to remain to condition existing before selective demolition operations began.
8. Remove each item completely including straps, hangers, clips, fasteners, shims, blocking and accessories.
9. Prepare and repair substrates receive new construction. Plug holes from removed fasteners and anchors with similar substrate material such as wood plugs, non-shrink grout, plaster, etc. Provide blocking and construction compatible with existing materials for securing new construction to tie to existing. Patch and level.

B. Existing Items to Remain: Protect construction indicated to remain against damage and soiling during selective demolition. When permitted by Architect, items may be removed to a suitable, protected storage location during selective demolition and cleaned and re-installed in their original locations after selective demolition operations are complete.

3.6 PATCHING AND REPAIRS

A. General: Promptly repair damage to adjacent construction caused by selective demolition operations.

B. Patching: Comply with Division 1 Section "Cutting and Patching."

3.7 DISPOSAL OF DEMOLISHED MATERIALS

A. General: Promptly dispose of demolished materials. Do not allow demolished materials to accumulate on-site.

B. Burning: Do not burn demolished materials.

C. Disposal: Transport demolished materials off Owner's property and legally dispose of them.

END OF SECTION 02 41 15

SECTION 05 52 00 - METAL RAILING

PART 1 - GENERAL

1.1 SUMMARY

A. This Section includes steel handrail assemblies.

1.2 SUBMITTALS

A. Shop Drawings: Include plans, elevations, sections, details, and attachments to other work.

1.3 QUALITY ASSURANCE

A. Installer Qualifications: Fabricator of products.

B. Welding: Qualify procedures and personnel according to the following:
   1. AWS D1.1, "Structural Welding Code--Steel."
   2. AWS D1.3, "Structural Welding Code--Sheet Steel."

1.4 COORDINATION

A. Coordinate installation of anchorages for metal railing.

PART 2 - PRODUCTS

2.1 METALS, GENERAL

A. Metal Surfaces, General: Provide materials with smooth, flat surfaces, unless otherwise indicated. For components exposed to view in the completed Work, provide materials without seam marks, roller marks, rolled trade names, or blemishes.

B. Brackets, Flanges, and Anchors: Cast or formed metal of same type of material and finish as supported rails unless otherwise indicated.
   1. Provide type of bracket with predrilled hole for exposed bolt anchorage and that provides 1-1/2-inch (38-mm) clearance from inside face of handrail to finished wall surface.

2.2 FERROUS METALS

A. Steel Plates, Shapes, and Bars: ASTM A 36/A 36M.

B. Steel Tubing: ASTM A 500 (cold formed) or ASTM A 513, Type 5 (mandrel drawn).

C. Cast Iron: Either gray iron, ASTM A 48/A 48M, or malleable iron, ASTM A 47/A 47M, unless otherwise indicated.

2.3 FASTENERS

A. General: Provide stainless steel or hot-dip galvanized fasteners. Select fasteners for type, grade, and class required suitable for anchoring railings to other types of construction indicated.

2.4 MISCELLANEOUS MATERIALS

A. Welding Rods and Bare Electrodes: Select according to AWS specifications for metal alloy welded.

B. Galvanizing Repair Paint: High-zinc-dust-content paint for regalvanizing welds in steel, complying with SSPC-Paint 20.

C. Bituminous Paint: Cold-applied asphalt emulsion complying with ASTM D 1187.

2.5 FABRICATION, GENERAL

A. Provide complete assemblies, including railings, clips, brackets, and other components necessary to support and anchor stairs and platforms on supporting structure.
   1. Join components by welding, unless otherwise indicated.
   2. Use connections that maintain structural value of joined pieces.

B. Cut, drill, and punch metals cleanly and accurately. Remove burrs and ease edges to a radius of approximately 1/32 inch (1 mm), unless otherwise indicated. Remove sharp or rough areas on exposed surfaces.

C. Form bent-metal corners to smallest radius possible without causing grain separation or otherwise impairing work.

D. Form exposed work true to line and level with accurate angles and surfaces and straight edges.

E. Weld connections to comply with the following:
   1. Use materials and methods that minimize distortion and develop strength and corrosion resistance of base metals.
   2. Obtain fusion without undercut or overlap.
   3. Remove welding flux immediately.
   4. Weld exposed corners and seams continuously, unless otherwise indicated.
   5. At exposed connections, finish exposed welds and surfaces smooth and blended so no roughness shows after finishing and contour of welded surface matches that of adjacent surface.

F. Form exposed connections with hairline joints, flush and smooth, using concealed fasteners where possible. Where exposed fasteners are required, use Phillips flat-head (countersunk) screws or bolts unless otherwise indicated. Locate joints where least conspicuous.

G. Fabricate joints that will be exposed to weather in a manner to exclude water. Provide weep holes where water may accumulate.

2.6 STEEL RAILINGS

A. General: Fabricate railings to comply with requirements indicated for design, dimensions, details, finish, and member sizes, including wall thickness of tube, post spacings, and anchorage, but not less than that needed to withstand indicated loads.
   1. Configuration: As indicated in drawings.

B. Welded Connections: Fabricate railings with welded connections. Cope components at connections to provide close fit, or use fittings designed for this purpose. Weld all around at connections, including at fittings.

C. Form simple and compound curves by bending members in jigs to produce uniform curvature for each repetitive configuration required; maintain cross section of member throughout entire bend without buckling, twisting, cracking, or otherwise deforming exposed surfaces of components.

D. Close exposed ends of railing members with prefabricated end fittings.

E. Provide returns at ends of handrails, unless otherwise indicated. Close ends of returns unless clearance between end of rail and wall is 1/4 inch (6 mm) or less.

F. Brackets, Flanges, Fittings, and Anchors: Provide brackets, end closures, flanges, miscellaneous fittings, and anchors for interconnecting components and for attaching to other work. Furnish inserts and other anchorage devices for connecting to concrete or masonry work.
   1. For galvanized railings, provide galvanized fittings, brackets, fasteners, sleeves, and other ferrous-metal components.

2.7 FINISHES

A. Finish railings after fabrication. Grind smooth welds and rough areas.

B. Galvanizing: Hot-dip galvanize exterior railing components items as indicated to comply with applicable standard listed below:
   1. ASTM A 123/A 123M, for galvanizing steel and iron products.
   2. ASTM A 153/A 153M, for galvanizing steel and iron hardware.

PART 3 - EXECUTION

3.1 INSTALLATION, GENERAL

A. Fastening to In-Place Construction: Provide anchorage devices and fasteners where necessary for securing metal stairs to in-place construction. Include through-bolts, lag bolts, and other connectors.

B. Cut, drill, and fit for installing railing. Set units accurately in location, alignment, and elevation, measured from established lines and levels and free of rack.

C. Provide temporary bracing or anchors in formwork for items that are to be built into concrete, or similar construction.

D. Fit exposed connections accurately together to form hairline joints. Weld connections that are not to be left as exposed joints but cannot be shop welded because of shipping size limitations. Do not weld, cut, or abrade surfaces of exterior units that have been hot-dip galvanized after fabrication and are for bolted or screwed field connections.

3.2 INSTALLING STEEL RAILINGS

A. Attach railings to supporting wood with brackets, except where end flanges are used. Locate brackets as indicated or, if not indicated, at spacing required to support

B. Anchor handrail ends to wood with steel round flanges welded to rail ends and fasten with screw type fasteners such as lag screws.

3.3 ADJUSTING AND CLEANING

A. Galvanized Surfaces: Clean field welds, bolted connections, and abraded areas and repair galvanizing to comply with ASTM A 780.

END OF SECTION 05 52 00

SECTION 06 10 00 - ROUGH CARPENTRY

PART 1 - GENERAL

1.1 SUMMARY

A. This section describes carpentry related to exterior rough carpentry for elevated decking, stairs, ramps, and roof framing; including supporting framing.

B. Related Requirements:
1. Division 5 Section "Metal Railing" for steel handrails, secured to wood framing.
2. Section 07 41 00 "Pre-finished Metal Roof Panels" for roofing, secured to wood framing.

1.2 DELIVERY, STORAGE, AND HANDLING

A. Stack lumber flat with spacers beneath and between each bundle to provide air circulation.

B. Protect lumber from weather by covering with waterproof sheeting, securely anchored. Provide for air circulation around stacks and under coverings.

PART 2 - PRODUCTS

2.1 WOOD PRODUCTS, GENERAL

A. Lumber: DOC PS 20 and applicable rules of grading agencies indicated. If no grading agency is indicated, provide lumber that complies with the applicable rules of any rules-writing agency certified by the ALSC Board of Review. Provide lumber graded by an agency certified by the ALSC Board of Review to inspect and grade lumber under the rules indicated.
1. Factory mark each piece of lumber with grade stamp of grading agency.
2. Where nominal sizes are indicated, provide actual sizes required by DOC PS 20 for moisture content specified. Where actual sizes are indicated, they are minimum dressed sizes for dry lumber.
3. Provide dressed lumber, S4S, unless otherwise indicated.

B. Maximum Moisture Content of Lumber: 15 percent for 2-inch nominal (38-mm actual) thickness or less, 19 percent for more than 2-inch nominal (38-mm actual) thickness, unless otherwise indicated.

2.2 WOOD-PRESERVATIVE-TREATED LUMBER

A. Preservative Treatment by Pressure Process:
1. AWPA U1; Use Categories as follows:
   a. Category UC2 for interior construction, not in contact with the ground,

b. Category UC3B for exterior construction, not in contact with the ground, and
c. Category UC4C for items in contact with the ground.
2. Preservative Chemicals: Acceptable to authorities having jurisdiction and containing no arsenic or chromium.

B. Kiln-dry lumber after treatment to a maximum moisture content of 19 percent. Do not use material that is warped or that does not comply with requirements for untreated material.

C. Mark lumber with treatment quality mark of an inspection agency approved by the ALSC Board of Review.

D. Application: Treat all rough carpentry in this project.

2.3 DIMENSION LUMBER FRAMING

A. General: Provide dimension lumber of grades indicated according to the American Lumber Standards Committee National Grading Rule provisions of the grading agency indicated.

B. Exterior Framing: No. 2 SYP, or specie of equivalent structural performance characteristic.

C. Nailers, Furring and Blocking: "Standard" stud grade, or No. 3 grade lumber with 19 percent maximum moisture content of any species or board-size lumber as required.

2.4 FASTENERS

A. General: Provide fasteners of size and type indicated that comply with requirements specified in this article for material and manufacture.
1. Where rough carpentry is exposed to weather, in ground contact, pressure-preservative treated, or in area of high relative humidity, provide fasteners with hot-dip zinc coating complying with ASTM A 153/A 153M, or Type 304 stainless steel.
a. Nails, Brads, and Staples: ASTM F 1667.
1) Provide glue-coated ring shank nail fasteners, where used.
b. Wood Screws: ASME B18.6.1.
c. Lag Bolts: ASME B18.2.1 (ASME B18.2.3.8M).

PART 3 - EXECUTION

3.1 INSTALLATION, GENERAL

A. Set rough carpentry to required levels and lines, with members plumb, true to line, cut, and fitted. Fit rough carpentry to other construction; scribe and cope as needed for accurate fit. Locate nailers, blocking, and similar supports to comply with requirements for attaching other construction.

B. Framing Standard: Comply with AF&PA's WCD 1, "Details for Conventional Wood Frame Construction," unless otherwise indicated.

C. Do not splice structural members between supports unless otherwise indicated.

D. Sort and select lumber so that natural characteristics will not interfere with installation or with fastening other materials to lumber. Do not use materials with defects that interfere with function of member or pieces that are too small to use with minimum number of joints or optimum joint arrangement.

E. Comply with AWPA M4 for applying field treatment to cut surfaces of preservative-treated lumber.
   1. Use inorganic boron for items that are continuously protected from liquid water.
   2. Use copper naphthenate for items not continuously protected from liquid water.

F. Securely attach rough carpentry work to substrate by anchoring and fastening as indicated, complying with the following:
   1. Table 2304.9.1, "Fastening Schedule," in ICC's International Building Code.
   2. Table R602.3(1), "Fastener Schedule for Structural Members," and Table R602.3(2), "Alternate Attachments," in ICC's International Residential Code for One- and Two-Family Dwellings.

G. Select fasteners of size that will not fully penetrate members where opposite side will be exposed to view or will receive finish materials. Make tight connections between members. Install fasteners without splitting wood. Drive nails snug but do not countersink nail heads unless otherwise indicated.

H. For exposed work, arrange fasteners in straight rows parallel with edges of members, with fasteners evenly spaced, and with adjacent rows staggered.

3.2 WOOD BLOCKING, AND NAILER INSTALLATION

A. Install where indicated and where required for attaching other work. Form to shapes indicated and cut as required for true line and level of attached work. Coordinate locations with other work involved.

B. Attach items to substrates to support applied loading. Recess bolts and nuts flush with surfaces unless otherwise indicated.

C. Where wood-preservative-treated lumber is installed adjacent to metal decking, install continuous flexible flashing separator between wood and metal decking.

3.3 ROOF RAFTER FRAMING INSTALLATION

A. Roof Rafter Framing: Fabricate roof and rafter framing to receive nailers for roofing.
   1. At valleys, provide double-valley rafters of size indicated or, if not indicated, of same thickness as regular rafters and 2 inches (50 mm) deeper. Bevel ends of jack rafters for full bearing against valley rafters.

2. At hips, provide hip rafter of size indicated or, if not indicated, of same thickness as regular rafters and 2 inches (50 mm) deeper. Bevel ends of jack rafters for full bearing against hip rafter.

B. Provide collar beams (ties) as indicated or, if not indicated, provide 1-by-6-inch nominal- (19-by-140-mm actual-) size boards between every third pair of rafters, but not more than 48 inches (1219 mm) o.c. Locate below ridge member, at third point of rafter span. Cut ends to fit roof slope and nail to rafters.

C. Provide framing for eaves, overhangs, and other conditions .

3.4 POST SUPPORTS

A. Excavate to depth indicated, or minimum 3-ft. deep if not indicated, to set wood post supports.

B. At the bottom of the excavation, provide minimum 3-inch thick drainage gravel bedding.

C. Set support posts in the excavation, tamp and backfill to provide plumb and vertical post support.

3.5 ELEVATED DECK JOIST FRAMING INSTALLATION

A. General: Install joists with crown edge up and support ends of each member with not less than 1-1/2 inches (38 mm) of bearing on wood or metal, or 3 inches (76 mm) on masonry. Attach floor joists where framed into wood supporting members by using wood ledgers; or, by galvanized metal joist hangers at Contractor's option. Do not notch joists.

B. Frame openings with headers and trimmers supported by metal joist hangers; double headers and trimmers where span of header exceeds 48 inches (1200 mm).

C. Lap members framing from opposite sides of beams or girders not less than 4 inches (102 mm,) or securely tie opposing members together. Provide solid blocking of 2-inch nominal (38-mm actual) thickness by depth of joist over supports.

D. Provide solid blocking of 2-inch nominal (38-mm actual) thickness by depth of joist at intervals of 96 inches (2438 mm) o.c., between joists.

3.6 STAIR FRAMING INSTALLATION

A. Provide stairs of size, space, and configuration indicated or, if not indicated, to comply with the following requirements:
   1. Member Sizes
      a. Stringers: 2-by-12-inch nominal- (38-by-286-mm actual-) size, minimum.
      b. Treads: 2-by-6-inch nominal- (38-by-140-mm actual-) size, minimum.
   2. Material: Solid framing lumber.
   3. Spacing: At least three stringer members for each 36-inch (914-mm) clear width of stair.

B. Provide stair framing with no more than 3/16-inch (4.7-mm) variation between adjacent treads and risers and no more than 3/8-inch (9.5-mm) variation between largest and smallest treads and risers within each flight.

3.7 RAILING INSTALLATION

A. Balusters and Railings: Nail in place. Drive fastener heads flush with wood surface.

B. Newel Posts: Secure to stringers and risers with through bolts or lag screws.

3.8 PROTECTION

A. Protect completed construction from damage for Owner's acceptance. Replace damaged and defective materials.

END OF SECTION 06 10 00

SECTION 06 40 00 - WOODWORK

PART 1 - GENERAL

1.1 SUMMARY

A. Woodwork includes, but is not limited to:
   1. Open Shelving
   2. Office desk and countertop, including hardware.
   3. Circulation Desk and countertop, including hardware.
   4. Temporary plywood toilet partitions, including hardware. .

1.2 QUALITY ASSURANCE

A. Quality Standards: Architectural Woodwork Institute (AWI) "Quality Standards."

1.3 SUBMITTALS

A. Shop Drawings: Submit shop drawings showing location of each item, dimensioned plans and elevations, large scale details, attachment devices and other components.
   1. Include product data submittals hardware and accessories under this heading.

B. Samples - Solid Surface and Plastic Laminate: Manufacturer's complete range for selection.

1.4 PRODUCT DELIVERY, STORAGE AND HANDLING

A. Protect woodwork during transit, delivery, storage and handling to prevent damage, soiling and deterioration.

B. Deliver woodwork after painting, wet work, grinding and similar operations which could damage, soil or deteriorate woodwork have been completed in installation areas. Store only in areas meeting required environmentally controlled conditions.

1.5 JOB CONDITIONS

A. Do not install woodwork until required temperature and relative humidity have been stabilized and will be maintained.

B. Field Measurements: Where woodwork is indicated to fit to other construction, verify dimensions of other construction by field measurements before fabrication. Coordinate fabrication schedule with construction progress to avoid delaying the Work.

PART 2 - PRODUCTS

2.1 BASIC MATERIALS AND FABRICATION METHODS

A. Quality Standards: Comply with indicated standards as applicable:

1. Standing and Running Trim: AWI Section 300.
2. Casework and Countertops: AWI Section 400.

B. Wood Moisture Content: Kiln-dried (KD) lumber with an average content range of 8% to 13%. Maintain temperature and relative humidity during fabrication, storage and finishing operations so that moisture content values for woodwork at time of installation do not exceed 8% to 13%.

C. Wood Product Quality Standards:
1. Plywood Standard: PS 1/ANSI A199.1.
2. Hardwood Plywood Standard: PS 51.

D. Design and Construction Features: Comply with details shown for profile and construction of architectural woodwork; and, where not otherwise shown, comply with applicable Quality Standards, with alternate details as Fabricator's option.

E. Pre-Cut Openings: Fabricate architectural woodwork with pre-cut openings, where possible, to receive hardware, appliances, plumbing fixtures, electrical work and similar items. Locate openings accurately and use templates or roughing-in diagrams for proper size and shape. Smooth edges of cutoffs and, where located in countertops and similar exposures seal edges of cutouts with a water-resistant coating.

F. Measures: Before proceeding with fabrication of woodwork to be fitted to other construction, obtain measurements and verify dimensions and shop drawing details for accurate fit. Where sequence of measuring substrates before fabrication would delay the project, proceed with fabrication (without field measurements) and provide ample borders and edges to allow for subsequent scribing and trimming of woodwork for accurate fit. A.W.I. Custom grade.

2.2 STANDING AND RUNNING TRIM

A. Solid stock kiln dried to referenced standard.

B. Grade and Specie: AWI Section 300
1. Wood: Opaque paint finish: Any close-grained hardwood specie. Custom Grade.

C. Fabrication: Mill cut to profiles and shapes indicated.

2.3 PLYWOOD

A. General: Lumber, veneer core or MDF core construction (OSB, particleboard not permitted) with standard odd number of plies for thickness indicated. Backing of any hardwood compatible with face species. 4' x 8' (1.2 x 2.4 m) nominal panel size. Polish sanded finish.
1. Plywood (opaque paint finish and for locations not requiring paint finish): Any close-grained paint grade specie, but do not use pine. Economy grade for opaque paint finish and custom grade for locations not requiring paint finish.

B. Exposed Edges: Provide 1/2-inch solid stock lumber hardwood edge band treatments in compliance with AWI standards.

2.4 COUNTERTOPS AND SPLASHES

A. Plywood: Comply with requirements above.

B. Countertop Edge Trim: For exposed wood trim at countertop edges, provide transparent finish trim specified above.

2.5 LAMINATES

A. Plastic Laminate: NEMA LD-3; type, thickness, color, pattern and finish as selected by the Architect from manufacturer's standard materials. Products by Formica, Nevamar, Pionite, Wilsonart, or approved equal.

B. Fabrication: Laminate to plywood, wood and locations indicated. Make neat edges for straight and neat appearance for final installation.
   1. Countertops with Sinks: Fabricate with lumber veneer core plywood. (OSB, particleboard not permitted.)

2.6 CABINETS AND SHELVING

A. Woodwork for Open Shelving, Office Desk and Library Circulation Desk:
   1. Grade:
      a. Office Desk and Library Circulation Desk: Custom grade construction.
      b. Open Shelving: Custom Grade.
   2. Cabinet Construction: Flush overlay on face frame

B. Plastic-Laminate Countertops:
   1. High-Pressure Decorative Laminate Grade: HGS.
   2. Colors, Patterns, and Finishes: As selected by Architect from full range of available samples.
   3. Edge Treatment: Same as laminate cladding on horizontal surfaces.

C. Fabrication: Fabricate cabinets and shelving as indicated.
   1. Shelving: Fabricate sides with 5/4-inch thick plywood.

D. Cabinet and Shelf Hardware: Satin chrome finish, unless noted otherwise.
   1. Drawer Glides: Epoxy coated paint finish cold-rolled steel construction with solid acetate roller. Positive stop with lift-out disconnect. 1284 by Knape & Vogt, or equal.
      a. 1 pair per drawer .
   2. Shelf Standards and Supports: Zinc-coated steel, recessed mount, 255ZC standards and zinc-coated steel 256ZC supports by Knape & Vogt, or equal.
   3. Cabinet Door Hinges: Self-closing, 120 degree opening swing, heavy duty “European” type concealed hinges by series 90 by Blum, or Hafele.
      a. Minimum 2 per door.
   4. Cabinet Door and Drawer Pulls: 4-inch (100 cm) bent square tubular pull. Satin chrome or aluminum finish. 4477(AL) by Stanley, 284 by Trimco, or approved equal.
      a. 1 per drawer face.

2.7 TEMPORARY TOILET PARTITIONS

A. Materials: Minimum 3/4-inch thick plywood panels with 1/-2-inch solid stock wood edge banding.
   1. Plywood: Any hardwood specie veneer. Exterior grade plywood, C-C surface.
   2. Edge Band: Any solid stock hardwood.

B. Hardware and Accessories: Standard operating hardware and accessories by commercial grade toilet partitions, as manufactured by Bradley, Bobrick, Ampco, Scranton, or approved equal.
   1. Material: Aluminum, unless indicated otherwise.
   2. Brackets (for mounting panels to walls): Stirrup type, ear or U-brackets, chrome-plated zamac. 3 brackets per panel.
   3. Hinges: Manufacturer's standard paired, self-closing type that can be adjusted to hold doors open at any angle up to 90 degrees, allowing emergency access by lifting door.
   4. Latch and Keeper: Manufacturer's standard surface-mounted latch unit designed for emergency access and with combination rubber-faced door strike and keeper. Provide units that comply with regulatory requirements for accessibility at compartments designated as accessible.
   5. Coat Hook: Manufacturer's standard combination hook and rubber-tipped bumper, sized to prevent in-swinging door from hitting compartment-mounted accessories.
   6. Door Bumper: Manufacturer's standard rubber-tipped bumper at out-swinging doors.
   7. Door Pull: Manufacturer's standard unit at out-swinging doors that complies with regulatory requirements for accessibility. Provide units on both sides of doors at compartments designated as accessible.
   8. Toilet Paper Dispenser: Single roll, surface mount roll holder chrome-plated Zamak posts, with removable roller; Model 0705-Z by ASI, or equivalent products by other.

C. Anchorages and Fasteners: Manufacturer's standard exposed fasteners of stainless steel, finished to match the items they are securing, with theft-resistant-type heads. Provide sex-type bolts for through-bolt applications. For concealed anchors, use stainless-steel, hot-dip galvanized-steel, or other rust-resistant, protective-coated steel compatible with related materials.

PART 3 - EXECUTION

3.1 PREPARATION

A. Condition woodwork to average prevailing humidity conditions in installation areas prior to installing.

3.2 INSTALLATION

A. General: Install plumb, level, true and straight with no distortions. Use concealed shims. Scribe and cut work to fit adjoining work and refinish cut surfaces or repair damaged finish at cuts.

B. Fastening and Anchoring: Secure woodwork to anchors or blocking built-in or directly attached to substrates, stripping and blocking with countersunk, concealed fasteners and blind nail for complete installation. Except where prefinished matching fasteners heads are required, use fine finishing nails for exposed nailing, countersunk and filled flush with woodwork.

C. Office Desk and Library Circulation Desk: Install without distortion so that doors and drawers will fit openings properly and will be accurately aligned. Properly fasten and adjust hardware to to provide unencumbered operation. Install countertops as indicated.
   1. Paint as described in Division 9.

D. Temporary Toilet Partitions: Job construct with components as indicated. Properly fasten, secure and adjust hardware to to provide unencumbered operation. Complete installation to operation and function like standard commercial grade toilet partitions.
   1. Paint as described in Division 9.

3.3 ADJUSTMENT, CLEANING, FINISHING AND PROTECTION

A. Repair damaged and defective woodwork to eliminate defects functionally and visually. Where not possible to repair properly, replace woodwork. Adjust joinery for uniform appearance.

B. Clean hardware. Lubricate and make adjustments for proper operation.

C. Clean woodwork on exposed and semi-exposed surfaces. Touch-up shop-applied finishes to restore damaged or soiled areas.

END OF SECTION 06 40 00

SECTION 06 64 00 - FRP PANELING

PART 1 - GENERAL

1.1 SUMMARY

A. Section Includes fiber-glass reinforced plastic sheet paneling.

1.2 ACTION SUBMITTALS

A. Product Data: For each type of product.

B. Samples: For plastic paneling and trim accessories, in manufacturer's standard sizes.

1.3 PROJECT CONDITIONS

A. Environmental Limitations: Do not deliver or install plastic paneling until spaces are enclosed and weathertight and temporary HVAC system is operating and maintaining ambient temperature and humidity conditions at occupancy levels during the remainder of the construction period.

PART 2 - PRODUCTS

2.1 MANUFACTURERS

A. Source Limitations: Obtain plastic paneling and trim accessories from single manufacturer.

2.2 PANELING

A. Manufacturers: Subject to compliance with requirements, provide products by one of the following, or approved equivalent:
   1. Fiber-Tech Industries
   2. Kemlite Company Inc.
   3. Marlite.
   4. Nudo Products, Inc.

B. Glass-Fiber-Reinforced Plastic Paneling: Gelcoat-finished, glass-fiber-reinforced plastic panels complying with ASTM D 5319.
   1. Surface-Burning Characteristics: As follows when tested by a qualified testing agency according to ASTM E 84. Identify products with appropriate markings of applicable testing agency.
      a. Flame-Spread Index: 25 or less.
      b. Smoke-Developed Index: 450 or less.
   2. Nominal Thickness: Not less than 0.12 inch (3.0 mm).
   3. Surface Finish:
      a. Molded pebble texture.

4. Color: As selected by Architect from manufacturer's full range.

2.3 ACCESSORIES

A. Trim Accessories: Manufacturer's standard one-piece or two-piece, snap-on vinyl extrusions designed to retain and cover edges of panels. Provide division bars, inside corners, and caps as needed to conceal edges.
   1. Color: Match panels.

B. Exposed Fasteners: Nylon drive rivets recommended by panel manufacturer.

C. Concealed Mounting Splines: Continuous, H-shaped aluminum extrusions designed to fit into grooves routed in edges of factory-laminated panels and to be fastened to substrate.

D. Adhesive: As recommended by plastic paneling manufacturer and with a VOC content of 50 g/L or less.

E. Sealant: Mildew-resistant, single-component, neutral-curing silicone sealant recommended by plastic paneling manufacturer and complying with requirements in Section 079200 "Joint Sealants."

PART 3 - EXECUTION

3.1 EXAMINATION

A. Examine substrates and conditions for compliance with requirements for installation tolerances and other conditions affecting performance of the Work.

B. Make corrections to unsatisfactory conditions.

3.2 PREPARATION

A. Prepare substrate by sanding high spots and filling low spots as needed to provide flat, even surface for panel installation.

B. Clean substrates of substances that could impair adhesive bond, including oil, grease, dirt, and dust.

C. Condition panels by unpacking and placing in installation space before installation according to manufacturer's written recommendations.

D. Lay out paneling before installing. Locate panel joints to provide equal panels at ends of walls not less than half the width of full panels, so that trimmed panels at corners are not less than 12 inches (300 mm) wide.
   1. Mark plumb lines on substrate at trim accessory locations for accurate installation.
   2. Locate trim accessories to allow clearance at panel edges according to manufacturer's written instructions.

3.3 INSTALLATION

A. Install plastic paneling according to manufacturer's written instructions.

B. Install panels in a full spread of adhesive.

C. Install trim accessories with adhesive and nails.

D. Fill grooves in trim accessories with sealant before installing panels, and bed inside corner trim in a bead of sealant.

E. Maintain uniform space between panels and wall fixtures. Fill space with sealant.

F. Remove excess sealant and smears as paneling is installed. Clean with solvent recommended by sealant manufacturer and then wipe with clean dry cloths until no residue remains.

END OF SECTION 06 64 00

SECTION 07 21 00 - BUILDING INSULATION

PART 1 - GENERAL

1.1 SUMMARY

A. Section includes glass fiber blanket type insulation to replace insulations in existing framing where damaged wall construction was previously removed.

B. Related Requirements:
   1. Division 9 Section – Gypsum Board.

1.2 DELIVERY, STORAGE, AND HANDLING

A. Protect insulation materials from physical damage and from deterioration due to moisture, soiling, and other sources. Store inside and in a dry location. Comply with manufacturer's written instructions for handling, storing, and protecting during installation.

PART 2 - PRODUCTS

2.1 GLASS-FIBER BLANKET

A. Manufacturers: Subject to compliance with requirements, provide products by one of the following:
   1. CertainTeed Corporation.
   2. Johns Manville.
   3. Knauf Insulation.
   4. Owens Corning.

B. Glass-Fiber Blanket, Kraft Faced: ASTM C 665 insulation with maximum flame-spread and smoke-developed indexes of 25 and 50, respectively, per ASTM E 84; passing ASTM E 136 for combustion characteristics.
   1. Thicknesses: 3-1/2-inches in 3-5/8-inch metal stud walls; 6-inches in 6-inch metal stud walls; and 9-inches in 8-inch metal stud walls.

PART 3 - EXECUTION

3.1 PREPARATION

A. Clean substrates of substances that are harmful to insulation, including removing projections capable of puncturing insulation or facings, or that interfere with insulation attachment.

3.2 INSTALLATION, GENERAL

A. Comply with insulation manufacturer's written instructions applicable to products and applications.

B. Install insulation that is undamaged, dry, and unsoiled and that has not been left exposed to ice, rain, or snow at any time.

C. Extend insulation to envelop entire area to be insulated. Fit tightly around obstructions and fill voids with insulation. Remove projections that interfere with placement.

D. Provide sizes to fit applications and selected from manufacturer's standard thicknesses, widths, and lengths. Apply single layer of insulation units unless multiple layers are otherwise shown or required to make up total thickness.

3.3 INSTALLATION OF INSULATION IN FRAMED CONSTRUCTION

A. Blanket Insulation: Install in cavities formed by framing members according to the following requirements:
   1. Use insulation widths and lengths that fill the cavities formed by framing members. If more than one length is required to fill the cavities, provide lengths that will produce a snug fit between ends.
   2. Place insulation in cavities formed by framing members to produce a friction fit between edges of insulation and adjoining framing members.
   3. Maintain 3-inch (76-mm) clearance of insulation around recessed lighting fixtures not rated for or protected from contact with insulation.
   4. For metal-framed wall cavities where cavity heights exceed 96 inches (2438 mm), support unfaced blankets mechanically and support faced blankets by taping flanges of insulation to flanges of metal studs.

B. Miscellaneous Voids: Install insulation in miscellaneous voids and cavity spaces where required to prevent gaps in insulation using the following materials:
   1. Glass-Fiber Insulation: Compact to approximately 40 percent of normal maximum volume equaling a density of approximately 2.5 lb/cu. ft. (40 kg/cu. m).
   2. Spray Polyurethane Insulation: Apply according to manufacturer's written instructions.

3.4 PROTECTION

A. Protect installed insulation from damage due to harmful weather exposure, physical abuse, and other causes. Provide temporary coverings or enclosures where insulation is subject to abuse and cannot be concealed and protected by permanent construction immediately after installation.

END OF SECTION 07 21 00

SECTION 07 40 00 - PREFINISHED METAL ROOF PANELS

PART 1 - GENERAL

1.1 SUMMARY

A. This Section includes prefinished metal roof panel components, including gutters, downspouts, trim and accessories.

B. Related Sections
   1. Framing is described in Division 6 Section, Rough Carpentry.

1.2 SUBMITTALS

A. Product Data: Include material descriptions, profiles, and finishes for each type of the following metal building system components, including flashing, trim and accessories:
   1. Metal roof panels.

1.3 QUALITY ASSURANCE

A. Performance Requirements - General: For each installation, provide a complete, set of components and assemblies, including installing with existing construction, capable of withstanding movement, and exposure to weather without failure or infiltration of water into building interior.

B. Erector Qualifications: An experienced erector who has specialized in erecting and installing work similar in material, design, and extent to that indicated for this Project and who is acceptable to manufacturer.

C. Source Limitations: Obtain components of each type of metal panel assembly, from single source from single manufacturer.

1.4 DELIVERY, STORAGE, AND HANDLING

A. Deliver components, sheets, panels, and other manufactured items so as not to be damaged or deformed. Package metal panels for protection during transportation and handling.

B. Unload, store, and erect metal panels in a manner to prevent bending, warping, twisting, and surface damage.

C. Stack metal panels horizontally on platforms or pallets, covered with suitable weathertight and ventilated covering. Store metal panels to ensure dryness and with positive slope for drainage of water. Do not store metal panels in contact with other materials that might cause staining, denting, or other surface damage.

D. Retain strippable protective covering on metal panels during installation.

1.5 PROJECT CONDITIONS

A. Weather Limitations: Proceed with installation only when weather conditions permit metal panels to be installed according to manufacturers' written instructions and warranty requirements.

B. Field Measurements: Coordinate construction to ensure that actual building dimensions, locations of structural members, and openings correspond to established dimensions.

1.6 COORDINATION

A. Coordinate metal panel assemblies with rain drainage work, flashing, trim, and locations of existing supports and other adjoining work to provide a leakproof, secure, and non-corrosive installation.

PART 2 - PRODUCTS

2.1 MANUFACTURERS

A. Roof Panels by one of the following or approved equal.
1. American Buildings Company.
2. American Steel Building Company, Inc.
3. Butler Manufacturing Company.
4. Ceco Building Systems.
5. Gulf States Manufacturers, Inc.
6. Kirby Building Systems
7. MBCI
8. McElroy (Architectural Building Components).
9. Nucor Building Systems
10. Petersen
11. Whirlwind.
12. Varco-Pruden Buildings.

2.2 MATERIALS FOR METAL ROOF PANELS

A. Metallic-Coated Steel Sheet Pre-finished with Coil Coating: Steel sheet metallic coated to comply with ASTM A 755/A 755M.
1. Aluminum-Zinc Alloy-Coated Steel Sheet: ASTM A 792/A 792M, Structural Steel (SS), Grade 50 or 80 (340 or 550); with Class AZ50 (AZM150) coating designation.
2. Surface: Smooth, flat finish.
3. Exposed Finish: Galvalume finish.

B. Fabrication, General
1. Fabricate and finish metal roof panels and accessories at the factory to greatest extent possible, by manufacturer's standard procedures and processes, as necessary to fulfill indicated performance requirements demonstrated by laboratory testing. Comply with indicated profiles and with dimensional and structural requirements.

2. Fabricate metal roof panel joints with factory-installed captive gaskets or separator strips that provide a tight seal and prevent metal-to-metal contact, and that will minimize noise from movements within panel assembly.
3. Sheet Metal Accessories: Fabricate flashing and trim to comply with recommendations in SMACNA's "Architectural Sheet Metal Manual" that apply to the design, dimensions, metal, and other characteristics of item indicated.
   a. Form exposed sheet metal accessories that are without excessive oil canning, buckling, and tool marks and that are true to line and levels indicated, with exposed edges folded back to form hems.
   b. Fabricate nonmoving seams in accessories with flat-lock seams. Tin edges to be seamed, form seams, and solder.
   c. Sealed Joints: Form non-expansion, but movable, joints in metal to accommodate sealant and to comply with SMACNA standards.
   d. Conceal fasteners and expansion provisions where possible. Exposed fasteners are not allowed on faces of accessories exposed to view.
   e. Fabricate cleats and attachment devices from same material as accessory being anchored or from compatible, noncorrosive metal recommended in writing by metal panel manufacturer.
      1) Size: As recommended by SMACNA's "Architectural Sheet Metal Manual" or metal wall panel manufacturer for application but not less than thickness of metal being secured.

2.3 MISCELLANEOUS MATERIALS

A. Fasteners: Self-tapping screws, bolts, nuts, self-locking rivets and bolts, end-welded studs, and other suitable fasteners designed to withstand design loads. Provide fasteners with heads matching color of materials being fastened by means of plastic caps or factory-applied coating.
   1. Fasteners for Metal Panels: Self-drilling Type 410 stainless-steel or self-tapping Type 304 stainless-steel or zinc-alloy-steel hex washer head, with EPDM or PVC washer under heads of fasteners bearing on weather side of metal panels.
   2. Fasteners for Flashing and Trim: Blind fasteners or self-drilling screws with hex washer head.
   3. Blind Fasteners: High-strength aluminum or stainless-steel rivets.

B. Bituminous Coating: Cold-applied asphalt mastic, SSPC-Paint 12, compounded for 15-mil (0.4-mm) dry film thickness per coat. Provide inert-type noncorrosive compound free of asbestos fibers, sulfur components, and other deleterious impurities.

C. Metal Panel Sealants:
   1. Sealant Tape: Pressure-sensitive, 100 percent solids, gray polyisobutylene compound sealant tape with release-paper backing. Provide permanently elastic, non-sag, nontoxic, non-staining tape of manufacturer's standard size.
   2. Joint Sealant: ASTM C 920; one-part elastomeric polyurethane, polysulfide, or silicone-rubber sealant; of type, grade, class, and use classifications required to seal joints in metal panels and remain weathertight; and as recommended by metal building system manufacturer.

2.4 FIELD-ASSEMBLED METAL ROOF PANELS

A. Tapered-Rib-Profile, Exposed-Fastener Metal Roof Panels: “R” type panels, formed with raised, trapezoidal major ribs and intermediate stiffening ribs symmetrically spaced between major ribs; designed to be field assembled by lapping side edges of adjacent panels and mechanically attaching panels to supports using exposed fasteners in side laps.
   1. Material: Aluminum-zinc alloy-coated steel sheet, 26 gage minimum - 0.0159 inch (0.40 mm) thick.
      a. Exterior Finish: Galvalume both sides
   2. Major-Rib Spacing: 12 inches (305 mm) o.c.
   3. Panel Coverage: 36 inches (914 mm).
   4. Panel Height: 1.25 inches (32 mm).

2.5 ACCESSORIES

A. General: Provide accessories as standard with manufacturer and as specified. Fabricate and finish accessories at the factory to greatest extent possible, by manufacturer's standard procedures and processes. Comply with indicated profiles and with dimensional and structural requirements.
   1. Form exposed sheet metal accessories that are without excessive oil canning, buckling, and tool marks and that are true to line and levels indicated, with exposed edges folded back to form hems.

B. Roof Panel Accessories: Provide components required for a complete metal roof panel assembly including fasciae, corner units, hip and ridge closures, clips, sealants, gaskets, fillers, closure strips, and similar items. Match material and finish of metal roof panels, unless otherwise indicated.
   1. Closures: Provide closures at eaves and ridges, fabricated of same material as metal roof panels.
   2. Clips: Manufacturer's standard, formed from steel sheet, designed to withstand negative-load requirements.
   3. Cleats: Manufacturer's standard, mechanically seamed cleats formed from steel sheet.
   4. Backing Plates: Provide metal backing plates at panel end splices, fabricated from material recommended by manufacturer.
   5. Closure Strips: Closed-cell, expanded, cellular, rubber or crosslinked, polyolefin-foam or closed-cell laminated polyethylene; minimum 1-inch- (25-mm-) thick, flexible closure strips; cut or pre-molded to match metal roof panel profile. Provide closure strips where indicated or necessary to ensure weathertight construction.

C. Flashing and Trim: Formed from minimum 0.0159-inch- (0.40-mm-) thick, metallic-coated steel sheet or aluminum-zinc alloy-coated steel sheet pre-painted with coil coating; finished to match adjacent metal panels.
   1. Provide flashing and trim as required to seal against weather and to provide finished appearance. Locations include, but are not limited to, eaves, rakes, corners, bases, framed openings, ridges, fasciae, and fillers.

D. Gutters: Formed from minimum 0.0159-inch- (0.40-mm-) thick, aluminum-zinc alloy-coated steel sheet ; finished to match roof fascia and rake trim. Match profile of gable trim, complete with end pieces, outlet tubes, and other special pieces as required. Fabricate in minimum 96-inch- (2438-mm-) long sections, sized according to SMACNA's "Architectural Sheet Metal Manual."
   1. Gutter Supports: Fabricated from same material and finish as gutters; spaced 36 inches (900 mm) o.c.

E. Downspouts: Formed from 0.0159-inch- (0.4-mm-) thick, zinc-coated (galvanized) steel sheet or aluminum-zinc alloy-coated steel sheet prepainted with coil coating; finished to match metal wall panels. Fabricate in minimum 10-foot- (3-m-) long sections, complete with formed elbows and offsets.
   1. Mounting Straps: Fabricated from same material and finish as gutters; spaced 10 feet (3 m) o.c.

PART 3 - EXECUTION

3.1 EXAMINATION

A. Examine substrates, areas, and conditions for compliance with requirements for installation tolerances, metal panel supports, and other conditions affecting performance of the Work.

B. Make corrections to unsatisfactory conditions.

3.2 METAL PANEL INSTALLATION, GENERAL

A. General: Install metal panels according to manufacturer's written instructions in orientation, sizes, and locations indicated. Install panels perpendicular to supports unless otherwise indicated. Anchor metal panels and other components of the Work securely in place, with provisions for thermal and structural movement.

B. Fasteners:
   1. Steel Panels: Use stainless-steel fasteners for surfaces exposed to the exterior; use galvanized-steel fasteners for surfaces exposed to the interior.

C. Joint Sealers: Install gaskets, joint fillers, and sealants where indicated and where required for weatherproof performance of metal panel assemblies. Provide types of gaskets, fillers, and sealants indicated or, if not indicated, types recommended by metal panel manufacturer.
   1. Seal metal panel end laps with double beads of tape or sealant, full width of panel. Seal side joints where recommended by metal panel manufacturer.
   2. Prepare joints and apply sealants to comply with requirements in Division 7 Section "Joint Sealants."

3.3 METAL ROOF PANEL INSTALLATION

A. General:
   1. Install ridge caps as metal roof panel work proceeds.

2. Flash and seal metal roof panels with weather closures at eaves and rakes. Fasten with self-tapping screws.

3.4 ACCESSORY INSTALLATION

A. General: Install accessories with positive anchorage to building and weathertight mounting, and provide for thermal expansion. Coordinate installation with flashings and other components.
   1. Install components required for a complete metal roof panel assembly including trim, copings, ridge closures, seam covers, flashings, sealants, gaskets, fillers, closure strips, and similar items.
   2. Install components for a complete metal wall panel assembly including trim, copings, corners, seam covers, flashings, sealants, gaskets, fillers, closure strips, and similar items.
   3. Where dissimilar metals will contact each other or corrosive substrates, protect against galvanic action by painting contact surfaces with bituminous coating, by applying rubberized-asphalt underlayment to each contact surface, or by other permanent separation as recommended by manufacturer.

B. Flashing and Trim: Comply with performance requirements, manufacturer's written installation instructions, and SMACNA's "Architectural Sheet Metal Manual." Provide concealed fasteners where possible, and set units true to line and level as indicated. Install work with laps, joints, and seams that will be permanently watertight and weather resistant.
   1. Install exposed flashing and trim that is without excessive oil canning, buckling, and tool marks and that is true to line and levels indicated, with exposed edges folded back to form hems. Install sheet metal flashing and trim to fit substrates and to result in waterproof and weather-resistant performance.
   2. Expansion Provisions: Provide for thermal expansion of exposed flashing and trim. Space movement joints at a maximum of 10 feet (3 m) with no joints allowed within 24 inches (600 mm) of corner or intersection. Where lapped or bayonet-type expansion provisions cannot be used or would not be sufficiently weather resistant and waterproof, form expansion joints of intermeshing hooked flanges, not less than 1 inch (25 mm) deep, filled with mastic sealant (concealed within joints).

C. Gutters: Join sections with riveted and soldered or lapped and sealed joints. Attach gutters to eave with gutter hangers spaced not more than 4 feet (1.2 m) o.c. using manufacturer's standard fasteners. Provide end closures and seal watertight with sealant. Provide for thermal expansion.

D. Downspouts: Join sections with 1-1/2-inch (38-mm) telescoping joints. Provide fasteners designed to hold downspouts securely 1 inch (25 mm) away from walls; locate fasteners at top and bottom and at approximately 60 inches (1500 mm) o.c. in between.
   1. Provide elbows at base of downspouts to direct water away from building.

3.5 CLEANING AND PROTECTION

A. Repair damaged galvanized coatings on galvanized items with galvanized repair paint according to ASTM A 780 and manufacturer's written instructions.

B. Touchup Painting: Cleaning and touchup painting are specified in Division 9 painting Sections.

C. Metal Panels: Remove temporary protective coverings and strippable films, if any, as metal panels are installed. On completion of metal panel installation, clean finished surfaces as recommended by metal panel manufacturer. Maintain in a clean condition during construction.
   1. Replace metal panels that have been damaged or have deteriorated beyond successful repair by finish touchup or similar minor repair procedures.

END OF SECTION 07 40 00

SECTION 09 22 16 - GYPSUM BOARD

PART 1 - GENERAL

1.1 SUMMARY

A. This Section includes gypsum wallboard and accessories, applied to existing framing where damaged wall board was previously removed.
   1. Include sound attenuating insulation at interior wall partitions. .
   2. Provide building insulation in exterior perimeter walls.
      a. Building insulation is specified in Division 7 Section, Building Insulation.

1.2 DEFINITIONS

A. Gypsum Board Terminology: Refer to ASTM C 11 for definitions of terms for gypsum board assemblies not defined in this Section or in other referenced standards.

1.3 DELIVERY, STORAGE, AND HANDLING

A. Deliver materials in original packages, containers, or bundles bearing brand name and identification of manufacturer or supplier.

B. Store materials inside under cover and keep them dry and protected against damage from weather, direct sunlight, surface contamination, corrosion, construction traffic, and other causes. Stack gypsum panels flat to prevent sagging.

1.4 PROJECT CONDITIONS

A. Environmental Limitations: Comply with ASTM C 840 requirements or gypsum board manufacturer's written recommendations, whichever are more stringent.

PART 2 - PRODUCTS

2.1 MANUFACTURERS

A. Manufacturers: Subject to compliance with requirements, provide products by one of the following:
   1. Gypsum Board and Related Products:
      a. American Gypsum Co.
      b. G-P Gypsum Corp.
      c. National Gypsum Company.
      d. United States Gypsum Co.

2.2 INTERIOR GYPSUM WALLBOARD

A. Panel Size: Provide in maximum lengths and widths available that will minimize joints in each area and correspond with support system indicated.

B. Gypsum Board, ASTM C 1396/C 1396M.
   1. Core: 5/8 inch (15.9 mm), Type X. Field verify match with existing thickness.
   2. Long Edges: Tapered.

C. Water-Resistant Gypsum Backing Board: ASTM C 630/C 630M.
   1. Core: 5/8 inch (15.9 mm), Type X.
   2. Locations: Walls in toilet rooms and wet areas.

2.3 TRIM ACCESSORIES

A. Interior Trim: ASTM C 1047.
   1. Material: Galvanized or aluminum-coated steel sheet.
   2. Shapes:
      a. Cornerbead: Use at outside corners.
      b. LC-Bead (J-Bead): Use at exposed panel edges.

2.4 JOINT TREATMENT MATERIALS

A. General: Comply with ASTM C 475.

B. Joint Tape:
   1. Interior Gypsum Wallboard: Paper.

C. Joint Compound for Interior Gypsum Wallboard: For each coat use formulation that is compatible with other compounds applied on previous or for successive coats.
   1. Pre-filling: At open joints and damaged surface areas, use setting-type taping compound.
   2. Embedding and First Coat: For embedding tape and first coat on joints, fasteners, and trim flanges, use drying-type, all-purpose compound.
      a. Use setting-type compound for installing paper-faced metal trim accessories.
   3. Fill Coat: For second coat, use drying-type, all-purpose compound.
   4. Finish Coat: For third coat, use drying-type, all-purpose compound.
   5. Skim Coat: For final coat of Level 5 finish, use drying-type, all-purpose compound.

2.5 AUXILIARY MATERIALS

A. General: Provide auxiliary materials that comply with referenced installation standards and manufacturer's written recommendations.

B. Steel Drill Screws: ASTM C 1002, unless otherwise indicated.
   1. Use screws complying with ASTM C 954 for fastening panels to steel members from 0.033 to 0.112 inch (0.84 to 2.84 mm) thick.

C. Sound Attenuation Blankets: ASTM C 665, Type I (blankets without membrane facing) produced by combining thermosetting resins with mineral fibers manufactured from glass, slag wool, or rock wool.
   1. Fire-Resistance-Rated Assemblies: Comply with mineral-fiber requirements of assembly.
   2. 3 inches (76 mm) thick

3. Subject to compliance with requirements, provide products by one of the following, or approved equal -
   a. Georgia-Pacific Corp.; Sound Control Blanket.
   b. Gold Bond Building Products Div., National Gypsum Co.; Glass Fiber Noise Barrier Batt.
   c. United States Gypsum Co.; Thermafiber SAFB.

PART 3 - EXECUTION

3.1 EXAMINATION

A. Examine areas and substrates, for compliance with requirements and other conditions affecting performance.

B. Remove existing drywall that are defective that were not removed previously.

C. Cut edges of existing gypsum wallboard to properly receive new wallboard material. Include removal of existing wallboard to part of framing flanges to allow proper attachment new wallboard.

D. Make corrections to unsatisfactory conditions.

3.2 INSTALLING STEEL FRAMING, GENERAL

A. Installation Standards: ASTM C 754, and ASTM C 840 requirements that apply to framing installation.

B. Install supplementary framing, blocking, and bracing at terminations in gypsum board assemblies to support fixtures, equipment services, trim, or similar construction. Comply with details indicated and with gypsum board manufacturer's written recommendations or, if none available, with United States Gypsum's "Gypsum Construction Handbook."

C. Isolate steel framing from building structure at locations indicated to prevent transfer of loading imposed by structural movement.
   1. Isolate ceiling assemblies where they abut or are penetrated by building structure.
   2. Isolate partition framing and wall furring where it abuts structure, except at floor. Install slip-type joints at head of assemblies that avoid axial loading of assembly and laterally support assembly.

D. Do not bridge building control and expansion joints with steel framing or furring members. Frame both sides of joints independently.

3.3 INSTALLING STEEL SUSPENDED CEILING

A. Suspend ceiling hangers from building structure as follows:
   1. Install hangers plumb and free from contact with insulation or other objects within ceiling plenum that are not part of supporting structural or ceiling suspension system. Splay hangers only where required to miss obstructions and offset

resulting horizontal forces by bracing, countersplaying, or other equally effective means.

2. Where width of ducts and other construction within ceiling plenum produces hanger spacings that interfere with the location of hangers required to support standard suspension system members, install supplemental suspension members and hangers in form of trapezes or equivalent devices. Size supplemental suspension members and hangers to support ceiling loads within performance limits established by referenced standards.
3. Secure wire hangers by looping and wire-tying, directly to structures or other devices and fasteners that are secure and appropriate for substrate, and in a manner that will not cause them to deteriorate or otherwise fail.
4. Do not attach hangers to steel deck tabs.
5. Do not attach hangers to steel roof deck. Attach hangers to structural members.
6. Do not connect or suspend steel framing from ducts, pipes, or conduit.

B. Installation Tolerances: Install steel framing components for suspended ceilings so members for panel attachment are level to within 1/8 inch in 12 feet (3 mm in 3.6 m) measured lengthwise on each member and transversely between parallel members.

C. Wire-tie or clip furring channels to supports.

D. Install suspended steel framing components in sizes and spacings indicated, but not less than that required by the referenced steel framing and installation standards.
1. Wire Hangers: 8 gage (4 mm) spaced 48 inch (1200 mm) centers.
2. Carrying Channels: 1-1/2 inch (38 mm) spaced 48 inch (1200 mm) centers.
3. Furring Channels: 3/4 inch (19 mm) spaced 16 inch (406 mm) centers.

E. Grid Suspension System: Attach perimeter wall track or angle where grid suspension system meets vertical surfaces. Mechanically join main beam and cross-furring members to each other and butt-cut to fit into wall track.

3.4 INSTALLING STEEL PARTITION FRAMING

A. Install tracks (runners) at floors, ceilings, and structural walls and columns where gypsum board assemblies abut other construction.
1. Where studs are installed directly against exterior walls, install asphalt-felt isolation strip between studs and wall.

B. Installation Tolerance: Install each steel framing and furring member so fastening surfaces vary not more than 1/8 inch (3 mm) from the plane formed by the faces of adjacent framing.

C. Extend partition framing full height to structural supports or substrates above suspended ceilings, except where partitions are indicated to terminate at suspended ceilings. Continue framing over frames for doors and openings and frame around ducts penetrating partitions above ceiling to provide support for gypsum board.
1. Cut studs 1/2 inch (13 mm) short of full height to provide perimeter relief.
2. For fire-resistance-rated and STC-rated partitions that extend to the underside of roof decks or other continuous solid-structure surfaces to obtain ratings, install

framing around structural and other members extending below roof decks, as needed to support gypsum board closures and to make partitions continuous from floor to underside of solid structure.

3. Where partitions do not extend to bottom of structure, provide bracing members, of same size as metal stud framing, at approximately 6 feet (1.83 m) spacings. Secure braces to structure above. Set braces at approximately 1-on-1 slope, alternate sides.
4. Provide 20 gage thick, or thickness recommended by tile backer board manufacturer, metal studs where framing is indicated to receive tile backer boards.

D. Install steel studs and furring at the following spacings:
1. Single-Layer Construction: 16 inches (406 mm) o.c., unless otherwise indicated.
2. Multilayer Construction: 16 inches (406 mm) o.c., unless otherwise indicated.

E. Install steel studs so flanges point in the same direction and leading edge or end of each panel can be attached to open (unsupported) edges of stud flanges first.

F. Partition Bridging: Furnish and install continuous metal channel horizontal bridging.
1. For partitions less than 9 feet (2.74 m) high, locate bridging at mid-height.
2. For partitions 9 feet (2.74 m) high up to 14 feet (4.27 m), locate bridging at 1/3-rd points.
3. For partitions 14 feet (4.27 m) high up to 20 feet (6.10 m), locate bridging at 1/4-th points.

G. Frame door openings to comply with GA-600 and with gypsum board manufacturer's applicable written recommendations, unless otherwise indicated. Screw vertical studs at jambs to jamb anchor clips on door frames; install runner track section (for cripple studs) at head and secure to jamb studs.
1. Install two studs at each jamb, unless otherwise indicated.
2. Install cripple studs at head adjacent to each jamb stud, with a minimum 1/2-inch (13-mm) clearance from jamb stud.
3. Extend jamb studs through suspended ceilings and attach to underside of floor or roof structure above.
4. Where partitions do not extend to bottom of structure, provide bracing members of same size as metal stud framing at strike side of door. Secure braces to structure above. Set braces at approximately 1-on-1 slope, one on each side of the partition.

H. Frame openings other than door openings the same as required for door openings, unless otherwise indicated. Install framing below sills of openings to match framing required above door heads.

3.5 APPLYING AND FINISHING PANELS, GENERAL

A. Gypsum Board Application and Finishing Standards: ASTM C 840 and GA-216.

B. Insulations:
1. Exterior Perimeter Walls: Provide thermal insulation specified in Division 7.
2. Interior Walls: Install sound attenuation blankets before installing gypsum panels, unless blankets are readily installed after panels have been installed on one side.

C. Install gypsum panels with face side out. Butt panels together for a light contact at edges and ends with not more than 1/16 inch (1.5 mm) of open space between panels. Do not force into place.

D. Locate edge and end joints over supports, except in ceiling applications where intermediate supports or gypsum board back-blocking is provided behind end joints. Do not place tapered edges against cut edges or ends. Stagger vertical joints on opposite sides of partitions. Do not make joints other than control joints at corners of framed openings.

E. Attach gypsum panels to steel studs so leading edge or end of each panel is attached to open (unsupported) edges of stud flanges first.

F. Attach gypsum panels to framing provided at openings and cutouts.

G. Where existing control and expansion joints are present, provide new joints matching existing and aligned with existing joint locations.

H. Cover both faces of steel stud partition framing with gypsum panels in concealed spaces (above ceilings, etc.), except in chases braced internally.
   1. Fit gypsum panels around ducts, pipes, and conduits.

I. Isolate perimeter of non-load-bearing gypsum board partitions at structural abutments, except floors. Provide 1/4- to 1/2-inch- (6.4- to 12.7-mm-) wide spaces at these locations, and trim edges with U-bead edge trim where edges of gypsum panels are exposed. Seal joints between edges and abutting structural surfaces with acoustical sealant.

J. Space fasteners in gypsum panels according to referenced gypsum board application and finishing standard and manufacturer's written recommendations.
   1. Space screws a maximum of 12 inches (304.8 mm) o.c. for vertical applications.

3.6 PANEL APPLICATION METHODS

A. General: Match number of layers of gypsum wallboard of existing construction.

B. Single-Layer Application:
   1. On partitions/walls, apply gypsum panels horizontally (perpendicular to framing), and minimize end joints.
      a. Stagger abutting end joints not less than one framing member in alternate courses of board.
   2. Single-Layer Fastening Methods: Apply gypsum panels to supports with steel drill screws.

C. Multilayer Application on Partitions/Walls: Apply gypsum board indicated for base layers and face layers vertically (parallel to framing) with joints of base layers located over stud or furring member and face-layer joints offset at least one stud or furring member with base-layer joints, unless otherwise indicated or required by fire-resistance-rated assembly. Stagger joints on opposite sides of partitions.

1. Multi-layer Fastening Methods: Fasten base layers and face layers separately to supports with screws.

3.7 INSTALLING TRIM ACCESSORIES

A. General: For trim with back flanges intended for fasteners, attach to framing with same fasteners used for panels. Otherwise, attach trim according to manufacturer's written instructions.

B. Control Joints: Install control joints at locations to coincide with building expansion joints.

3.8 FINISHING GYPSUM BOARD ASSEMBLIES

A. General: Treat gypsum board joints, interior angles, edge trim, control joints, penetrations, fastener heads, surface defects, and elsewhere as required to prepare gypsum board surfaces for decoration. Promptly remove residual joint compound from adjacent surfaces.

B. Prefill open joints, and damaged surface areas.

C. Apply joint tape over gypsum board joints, except those with trim having flanges not intended for tape.

D. Gypsum Board Finish Levels: Finish panels to levels indicated below, according to ASTM C 840, for locations indicated:
   1. Level 1: Embed tape at joints in plenum areas, chases and concealed areas.
   2. Level 5: Embed tape and apply separate first, fill, and finish coats of joint compound to tape, fasteners, and trim flanges, and apply skim coat of joint compound over entire surfaces to be field painted.

END OF SECTION 09 22 16

SECTION 09 51 00 - ACOUSTICAL CEILING SYSTEM

PART 1 - GENERAL

1.1 SUMMARY

A. This Section includes acoustical panels and exposed suspension systems for replacing ceilings that were previously removed.

1.2 SUBMITTALS

A. Product Data: For each type of product indicated.

B. Samples for Selection: For components with factory-applied color finishes.

1.3 QUALITY ASSURANCE

A. Source Limitations:
   1. Acoustical Ceiling Panel: Obtain each type through one source from a single manufacturer.
   2. Suspension System: Obtain each type through one source from a single manufacturer.

B. Fire-Test-Response Characteristics - Acoustical Panel Ceilings:
   1. Surface-Burning Characteristics: Provide acoustical panels with the following surface-burning characteristics complying with ASTM E 1264 for Class A materials as determined by testing identical products per ASTM E 84.

1.4 DELIVERY, STORAGE, AND HANDLING

A. Deliver acoustical panels, suspension system components, and accessories to Project site in original, unopened packages and store them in a fully enclosed, conditioned space where they will be protected against damage from moisture, humidity, temperature extremes, direct sunlight, surface contamination, and other causes.

B. Before installing acoustical panels, permit them to reach room temperature and a stabilized moisture content.

C. Handle acoustical panels carefully to avoid chipping edges or damaging units in any way.

1.5 PROJECT CONDITIONS

A. Environmental Limitations: Do not install acoustical panel ceilings until spaces are enclosed and weatherproof, wet work in spaces is complete and dry, work above ceilings is complete, and ambient temperature and humidity conditions are maintained at the levels indicated for Project when occupied for its intended use.

1.6 COORDINATION

A. Coordinate layout and installation of acoustical panels and suspension system with other construction that penetrates ceilings or is supported by them, including light fixtures, sprinklers, HVAC equipment, fire alarm system, and partitions.

1.7 EXTRA MATERIALS

A. Furnish extra materials described below that match products installed and that are packaged with protective covering for storage and identified with labels describing contents.
   1. Acoustical Ceiling Panels: Full-size panels equal to 2.0 percent of quantity installed.
   2. Suspension System Components: Quantity of each exposed component equal to 2.0 percent of quantity installed.

PART 2 - PRODUCTS

2.1 ACOUSTICAL CEILING PANELS

A. Acoustical Panel Standard: Manufacturer's standard panels of configuration indicated that comply with ASTM E 1264 classifications as designated by types, patterns, acoustical ratings, and light reflectances, unless otherwise indicated.

B. Acoustical Ceiling Panels: Match existing size, type and color for each room and area.

C. Manufacturers: Subject to compliance with requirements, provide acoustical panel ceilings by one of the following:
   1. Armstrong World Industries, Inc.
   2. Celotex Corporation; Architectural Ceilings Marketing Dept.
   3. USG Interiors, Inc.

2.2 METAL SUSPENSION SYSTEM

A. Metal Suspension System Standard: Manufacturer's standard direct-hung metal suspension systems of types, structural classifications, and finishes indicated that comply with applicable requirements in ASTM C 635.

B. Finishes and Colors, General: Comply with NAAMM's "Metal Finishes Manual for Architectural and Metal Products" for recommendations for applying and designating finishes. Provide manufacturer's standard factory-applied finish for type of system indicated.

C. Attachment Devices: Size for five times the design load indicated in ASTM C 635, Table 1, "Direct Hung," unless otherwise indicated.

D. Wire Hangers, Braces, and Ties: Provide wires complying with the following requirements:
   1. Zinc-Coated Carbon-Steel Wire: ASTM A 641/A 641M, Class 1 zinc coating, soft temper.

2. Size: Select wire diameter so its stress at three times hanger design load (ASTM C 635, Table 1, "Direct Hung") will be less than yield stress of wire, but provide not less than 0.106-inch- (2.69-mm-) diameter wire.

E. Hangers: Mild steel, zinc coated or protected with rust-inhibitive paint.

F. Hold-Down Clips: Where indicated, provide manufacturer's standard hold-down clips spaced 24 inches (610 mm) o.c. on all cross tees.

G. Wide-Face, Capped, Double-Web, Hot-Dip Galvanized, G60 (Z180), Steel Suspension System: Main and cross runners roll formed from cold-rolled steel sheet, hot-dip galvanized according to ASTM A 653/A 653M, G60 (Z180) coating designation.
1. Grid Cap Types: Match existing size, type and color for each room and area.
a. Manufacturer’s standard pre-finished, cold-rolled, 15/16-inch- (24-mm-) wide galvanized steel caps.
b. For Washable Ceiling Panels and Wet Areas: Pre-finished, cold-rolled, 15/16-inch- (24-mm-) wide, aluminum caps on flanges.
2. Structural Classification: Intermediate-duty system.
3. Face Design: Flat, flush.
4. Face Finish: Painted white.

2.3 METAL EDGE MOLDINGS AND TRIM

A. Manufacturers:
1. Armstrong World Industries, Inc.
2. Celotex Corporation; Architectural Ceilings Marketing Dept.
3. Chicago Metallic Corporation.
4. Fry Reglet Corporation.
5. USG Interiors, Inc.

B. Roll-Formed Sheet-Metal Edge Moldings and Trim: Type and profile indicated or, if not indicated, manufacturer's standard moldings for edges and penetrations that fit acoustical panel edge details and suspension systems indicated; formed from sheet metal of same material, finish, and color as that used for exposed flanges of suspension system runners.
1. For circular penetrations of ceiling, provide edge moldings fabricated to diameter required to fit penetration exactly.
2. Moldings and trim abutting walls shall be shadow type moldings.

PART 3 - EXECUTION

3.1 EXAMINATION

A. Examine substrates, areas, and conditions, including structural framing to which acoustical panel ceilings attach or abut for compliance with requirements specified in this and other Sections that affect ceiling installation and anchorage and with requirements for installation tolerances and other conditions affecting performance of acoustical panel ceilings.

B. Remove existing ceiling components that are defective that were not removed previously.

C. Make corrections to unsatisfactory conditions.

3.2 PREPARATION

A. Measure each ceiling area and establish layout of acoustical panels to balance border widths at opposite edges of each ceiling. Avoid using less-than-half-width panels at borders, and comply with layout shown on reflected ceiling plans.

B. Alight new grid and ceiling layout with existing, where existing ceilings partially remain.

3.3 INSTALLATION, GENERAL

A. General: Install acoustical panel ceilings to comply with ASTM C 636 and seismic requirements indicated, per manufacturer's written instructions and CISCA's "Ceiling Systems Handbook."

B. Suspend ceiling hangers from building's structural members and as follows:
   1. Install hangers plumb and free from contact with insulation or other objects within ceiling plenum that are not part of supporting structure or of ceiling suspension system.
   2. Splay hangers only where required to miss obstructions; offset resulting horizontal forces by bracing, countersplaying, or other equally effective means.
   3. Where width of ducts and other construction within ceiling plenum produces hanger spacings that interfere with location of hangers at spacings required to support standard suspension system members, install supplemental suspension members and hangers in form of trapezes or equivalent devices. Size supplemental suspension members and hangers to support ceiling loads within performance limits established by referenced standards and publications.
   4. Secure flat, angle, channel, and rod hangers to structure, including intermediate framing members, by attaching to inserts, eye screws, or other devices that are secure and appropriate for both structure to which hangers are attached and type of hanger involved. Install hangers in a manner that will not cause them to deteriorate or fail due to age, corrosion, or elevated temperatures.
   5. Do not attach hangers to steel deck tabs.
   6. Do not attach hangers to steel roof deck. Attach hangers to structural members.
   7. Space hangers not more than 48 inches (1200 mm) o.c. along each member supported directly from hangers, unless otherwise indicated; provide hangers not more than 8 inches (200 mm) from ends of each member.

C. Install edge moldings and trim of type indicated at perimeter of acoustical ceiling area and where necessary to conceal edges of acoustical panels.
   1. Screw attach moldings to substrate at intervals not more than 16 inches (400 mm) o.c. and not more than 3 inches (75 mm) from ends, leveling with ceiling suspension system to a tolerance of 1/8 inch in 12 feet (3.2 mm in 3.66 m). Miter corners accurately and connect securely.
   2. Do not use exposed fasteners, including pop rivets, on moldings and trim.

D. Install suspension system runners so they are square and securely interlocked with one another. Remove and replace dented, bent, or kinked members.

E. Install acoustical panels with undamaged edges and fit accurately into suspension system runners and edge moldings. Scribe and cut panels at borders and penetrations to provide a neat, precise fit.
   1. For square-edged panels, install panels with edges fully hidden from view by flanges of suspension system runners and moldings.

F. Install acoustical panels with hold-down clips to areas around near doors opening to exterior.

3.4 CLEANING

A. Clean exposed surfaces of acoustical panel ceilings, including trim, edge moldings, and suspension system members. Comply with manufacturer's written instructions for cleaning and touchup of minor finish damage.

B. Remove and replace ceiling components that cannot be successfully cleaned and repaired to permanently eliminate evidence of damage.

END OF SECTION 09 51 00

SECTION 09 65 00 - RESILIENT MATERIALS

PART 1 - GENERAL

1.1 SUMMARY

A. Types of resilient materials include:
   1. Resilient base.

1.2 QUALITY ASSURANCE

A. Resilient materials, including accessories such as underlayment and adhesive, must be free of asbestos.

1.3 SUBMITTALS

A. Samples for Selection: Submit full range of of resilient material samples for selection.

PART 2 - PRODUCTS

2.1 RESILIENT MATERIALS

A. Rubber and Vinyl Base: 4 inches high x 1/8 inch thick (102 x 3 mm), top set coved, matte finish, unless indicated otherwise.
   1. External Corners: Provide field-formed corners. Scoring or scribe back of base to coincide with edge of corner, heat-treat to retain the position and secure in place with adhesive. Fasteners are not permitted. Extend each leg a minimum of 12 inches each side of corner.
   2. Internal Corners: Cut to provide neat butt joint.

2.2 ACCESSORIES

A. Adhesive: Waterproof, stabilized type as recommended by manufacturer to suit material and substrate conditions.

PART 3 - EXECUTION

3.1 SURFACE CONDITIONS

A. Verify that materials may be installed in accordance with the manufacturer's recommendations.

B. Make corrections to unsatisfactory conditions.

3.2 PREPARATION

A. Remove dirt, oil, grease or other foreign matter from surfaces to receive materials.

B. Perform corrective action to remove surface defects that will telegraph through applied resilient materials.

3.3 APPLICATION OF ADHESIVES

A. Mix and apply adhesives in accordance with manufacturer's instructions.

B. Provide safety precautions during mixing and applications as recommended by adhesive manufacturer.

3.4 INSTALLATION – GENERAL

A. Install resilient materials using method indicated in strict compliance with manufacturer's recommendations.

B. Base: Make neat joints. Lay out in advance such that length of wall before applying the material. Avoid pieces less than 3 feet (0.9 m) long. Apply to provide continuous appearance.

3.5 CLEANING AND PROTECTION

A. Perform the following operations immediately after completing installation:
   1. Remove visible adhesive and other surface blemishes using cleaner recommended by tile manufacturers.
   2. Sweep or vacuum floor thoroughly.

END OF SECTION 09 65 00

SECTION 09 90 00 - PAINTING

PART 1 - GENERAL

1.1 SUMMARY

A. Surfaces to be painted include, but are not necessarily limited to:
   1. Interior existing and new gypsum wallboard surfaces.
   2. Woodwork: Open Shelving, Office Desk, Library Circulation Desk, Temporary Plywood Toilet Partitions

B. Do not paint pre-finished items, finished metal surfaces, operating parts, and labels.

1.2 QUALITY ASSURANCE

A. Source Limitations: Obtain primers for each coating system from the same manufacturer as the finish coats.

1.3 DELIVERY, STORAGE, AND HANDLING

A. Deliver to Project site in manufacturer's original, unopened packages and containers bearing manufacturer's name and label.

B. Store materials not in use in tightly covered containers in a well-ventilated area at a minimum ambient temperature of 45 deg F (7 deg C). Maintain storage containers in a clean condition, free of foreign materials and residue.
   1. Protect from freezing. Keep storage area neat and orderly. Remove oily rags and waste daily.

1.4 PROJECT CONDITIONS

A. Apply waterborne paints only when temperatures of surfaces to be painted and surrounding air are between 50 and 90 deg F (10 and 32 deg C).

PART 2 - PRODUCTS

2.1 MANUFACTURERS

A. Products: Subject to compliance with requirements, provide one of the products listed in other Part 2 articles.

2.2 PAINT MATERIALS, GENERAL

A. Material Compatibility: Provide block fillers, primers, and finish-coat materials that are compatible with one another and with the substrates indicated under conditions of service and application, as demonstrated by manufacturer based on testing and field experience.

B. Material Quality: Provide manufacturer's best-quality paint material of the various coating types specified that are factory formulated and recommended by manufacturer for application indicated. Paint-material containers not displaying manufacturer's product identification will not be acceptable.

C. Colors: Match color(s) of existing paint in each room.

2.3 INTERIOR PRIMERS

A. Interior Gypsum Board Primer: Factory-formulated latex-based primer for interior application.
   1. Benjamin Moore; Regal FirstCoat Interior Latex Primer & Underbody No. 216: Applied at a dry film thickness of not less than 1.0 mil (0.025 mm).
   2. Devoe: 50801 Wonder-Tones Interior Vinyl Latex Primer-Sealer.
   3. Dulux Paint; 1000-1200 Dulux Ultra Basecoat Interior Latex Wall Primer: Applied at a dry film thickness of not less than 1.2 mils (0.031 mm).
   4. Farrell-Calhoun: # 380 Latex Primer/Sealer.
   5. Pittsburgh Paints; 6-2 SpeedHide Interior Quick-Drying Latex Sealer: Applied at a dry film thickness of not less than 1.0 mil (0.025 mm).
   6. Sherwin-Williams; PrepRite Masonry Primer B28W300 Series: Applied at a dry film thickness of not less than 3.0 mils (0.076 mm).

B. Interior Wood Primer: Factory-formulated alkyd- or acrylic-latex-based interior wood primer.
   1. Benjamin Moore; Moore's Alkyd Enamel Underbody No. 217: Applied at a dry film thickness of not less than 1.4 mils (0.036 mm).
   2. Devoe: 51701 Wonder-Prime All-Purpose Latex Primer Sealer & Vapor Barrier.
   3. Dulux Paint; 1000-1200 Dulux Ultra Basecoat Interior Latex Wall Primer: Applied at a dry film thickness of not less than 1.2 mils (0.031 mm).
   4. Farrell-Calhoun: #599 Interior Alkyd Undercoater.
   5. Pittsburgh Paints; 6-855 SpeedHide Latex Enamel Undercoater: Applied at a dry film thickness of not less than 1.0 mil (0.025 mm).
   6. Sherwin-Williams; PrepRite Classic Interior Primer B28W101 Series: Applied at a dry film thickness of not less than 1.6 mils (0.041 mm).

2.4 INTERIOR FINISH COATS

A. Water-based Epoxy, semi-gloss
   1. Benjamin Moore; M43 series Acrylic Epoxy
   2. Devoe: Guardcoat Water Based Epoxy
   3. Dulux Paint; Tru-Glaze Acrylic epoxy #4418
   4. Farrell-Calhoun: #1200 WB.
   5. Pittsburgh Paints: Pitt-Glaze Water Based Epoxy, 16 Line
   6. Sherwin-Williams; Waterbased Catalyzed Epoxy.

PART 3 - EXECUTION

3.1 EXAMINATION

A. Examine substrates, areas, and conditions, for compliance with requirements for paint application. Comply with procedures specified in PDCA P4.
   1. Make corrections to unsatisfactory conditions.

3.2 PREPARATION

A. General: Remove hardware and hardware accessories, plates, machined surfaces, lighting fixtures, and similar items already installed that are not to be painted. If removal is impractical or impossible because of size or weight of the item, provide surface-applied protection before surface preparation and painting.
   1. After completing painting operations in each space or area, reinstall items removed using workers skilled in the trades involved.

B. Cleaning: Before applying paint or other surface treatments, clean substrates of substances that could impair bond of the various coatings. Remove oil and grease before cleaning.
   1. Schedule cleaning and painting so dust and other contaminants from the cleaning process will not fall on wet, newly painted surfaces.

C. Surface Preparation: Clean and prepare surfaces to be painted according to manufacturer's written instructions for each particular substrate condition and as specified.
   1. Provide barrier coats over incompatible primers or remove and reprime.
   2. Wood: Clean surfaces of dirt, oil, and other foreign substances with scrapers, mineral spirits, and sandpaper, as required. Sand surfaces exposed to view smooth and dust off.
      a. Scrape and clean small, dry, seasoned knots, and apply a thin coat of white shellac or other recommended knot sealer before applying primer. After priming, fill holes and imperfections in finish surfaces with putty or plastic wood filler. Sand smooth when dried.

D. Material Preparation: Mix and prepare paint materials according to manufacturer's written instructions.
   1. Maintain containers used in mixing and applying paint in a clean condition, free of foreign materials and residue.
   2. Stir material before application to produce a mixture of uniform density. Stir as required during application. Do not stir surface film into material. If necessary, remove surface film and strain material before using.
   3. Use only thinners approved by paint manufacturer and only within recommended limits.

3.3 APPLICATION

A. General: Apply paint according to manufacturer's written instructions. Use applicators and techniques best suited for substrate and type of material being applied.
   1. Do not paint over dirt, rust, scale, grease, moisture, scuffed surfaces, or conditions detrimental to formation of a durable paint film.

B. Scheduling Painting: Apply first coat to surfaces that have been cleaned, pretreated, or otherwise prepared for painting as soon as practicable after preparation and before subsequent surface deterioration.
   1. Allow sufficient time between successive coats to permit proper drying. Do not recoat surfaces until paint has dried to where it feels firm, and does not deform or feel sticky under moderate thumb pressure, and until application of another coat of paint does not cause undercoat to lift or lose adhesion.

C. Application Procedures: Apply paints and coatings by brush, roller, spray, or other applicators according to manufacturer's written instructions.

D. Minimum Coating Thickness: Apply paint materials no thinner than manufacturer's recommended spreading rate to achieve dry film thickness indicated. Provide total dry film thickness of the entire system as recommended by manufacturer.

E. Prime Coats: Before applying finish coats, apply a prime coat, as recommended by manufacturer, to material that is required to be painted or finished and that has not been prime coated by others. Recoat primed and sealed surfaces where evidence of suction spots or unsealed areas in first coat appears, to ensure a finish coat with no burn-through or other defects due to insufficient sealing.

F. Pigmented (Opaque) Finishes: Completely cover surfaces as necessary to provide a smooth, opaque surface of uniform finish, color, appearance, and coverage. Cloudiness, spotting, holidays, laps, brush marks, runs, sags, ropiness, or other surface imperfections will not be acceptable.

G. Completed Work: Match approved samples for color, texture, and coverage. Remove, refinish, or repaint work not complying with requirements.

3.4 CLEANING

A. Cleanup: At the end of each workday, remove empty cans, rags, rubbish, and other discarded paint materials from Project site.
   1. After completing painting, clean glass and paint-spattered surfaces.
   2. Remove spattered paint by washing and scraping without scratching or damaging adjacent finished surfaces.

3.5 PROTECTION

A. Protect work of other trades, whether being painted or not, against damage from painting.

B. Correct damage by cleaning, repairing or replacing, and repainting, as approved by Architect.

C. Provide "Wet Paint" signs to protect newly painted finishes. After completing painting operations, remove temporary protective wrappings provided by others to protect their work.
   1. After work of other trades is complete, touch up and restore damaged or defaced painted surfaces. Comply with procedures specified in PDCA P1.

3.6 INTERIOR PAINT SCHEDULE

A. Gypsum Drywall Systems
   1. 1 coat - latex primer.
   2. 2 coats – semi-gloss water-based epoxy.

B. Woodwork: Open Shelving, Office Desk, Library Circulation Desk, Temporary Plywood Toilet Partitions
   1. 1 coat - primer.
   2. 2 coats – semi-gloss water-based epoxy.

END OF SECTION 09 90 00

SECTION 10 44 00 - FIRE EXTINGUISHERS

PART 1 - GENERAL

1.1 SUMMARY

A. Section includes
   1. Portable, hand-carried fire extinguishers
   2. Mounting brackets

1.2 SUBMITTALS

A. Product Data: For each type of product indicated.

1.3 QUALITY ASSURANCE

A. NFPA Compliance: Comply with NFPA 10, "Portable Fire Extinguishers."

B. Fire Extinguishers: Listed and labeled for type, rating, and classification by an independent testing agency acceptable to authorities having jurisdiction.

PART 2 - PRODUCTS

2.1 PORTABLE, HAND-CARRIED FIRE EXTINGUISHERS

A. Fire Extinguishers: Type, size, and capacity for each fire extinguisher and mounting bracket indicated.
   1. Manufacturers: Subject to compliance with requirements, provide products by one of the following:
      a. J. L. Industries, Inc.; a division of Activar Construction Products Group.
      b. Larsen's Manufacturing Company.
      c. Potter Roemer LLC.
   2. Instruction Labels: Include pictorial marking system complying with NFPA 10, Appendix B and bar coding for documenting fire extinguisher location, inspections, maintenance, and recharging.

B. Multi-purpose Dry-Chemical Type: UL-rated 5 lbs nominal capacity, with mono-ammonium phosphate-based dry chemical in manufacturer's standard enameled container.
   1. Color: Red

2.2 MOUNTING BRACKETS

A. Mounting Brackets: Manufacturer's standard galvanized steel, designed to secure fire extinguisher to wall or structure, of sizes required for types and capacities of fire extinguishers indicated, with plated or red baked-enamel finish.
   1. Manufacturers: Subject to compliance with requirements, provide products by one of the following:
      a. J. L. Industries, Inc.; a division of Activar Construction Products Group.

b. Larsen's Manufacturing Company.
c. Potter Roemer LLC.

B. Identification: Lettering complying with authorities having jurisdiction for letter style, size, spacing, and location. Locate as indicated by Architect.
1. Identify bracket-mounted fire extinguishers with the words "FIRE EXTINGUISHER" in red letter decals applied to mounting surface.
a. Orientation: Vertical

PART 3 - EXECUTION

3.1 EXAMINATION AND PREPARATION

A. Examine walls and partitions for suitable framing depth and blocking where semi-recessed cabinets will be installed and prepare recesses as required by type and size of cabinet and trim style.

B. Make corrections to unsatisfactory conditions.

3.2 INSTALLATION

A. Install fire extinguishers and mounting brackets in locations indicated and in compliance with requirements of authorities having jurisdiction.

B. Examine fire extinguishers for proper charging and tagging.
1. Remove and replace damaged, defective, or undercharged fire extinguishers.

C. Mounting Brackets: Fasten mounting brackets to surfaces, square and plumb, at locations indicated.
1. Mounting Brackets: 54 inches (1372 mm) above finished floor to top of fire extinguisher.

END OF SECTION 10 44 00

SECTION 220500 – VALVES AND FITTINGS

PART 1 – GENERAL

1.1 SUMMARY

The work under this heading includes the furnishing and installing of all required appurtenances incidental to the piping systems as indicated on the drawings. Refer to GENERAL MECHANICAL REQUIREMENTS which shall apply to all work in this Section.

PART 2 - PRODUCTS

2.1 GENERAL

A. Provide factory-fabricated valves for use in service indicted. Provide valves of types and pressure ratings indicated; provide proper selection to comply with installation requirements. Provide sizes as indicated, and connections, which properly mate with pipe, tube, and equipment connections. Where more than one type is indicated, selection is installer's option. Valves shall be of same make for all these services.

B. Valves shall comply with the following:

Gate - cast iron - MSS SP-70
Gate - bronze - MSS SP-80
Globe - cast iron -MSS SP-85
Globe - bronze - MSS SP-80
Ball - MSS SP-110
Butterfly - MSS SP-67
Check - cast iron - MSS SP-71
Check - bronze - MSS SP-80

C. Gate valves shall be equipped with packing suitable for intended service. (Under no circumstances is asbestos acceptable.) Valves shall be designed so back seating protects packing and stem threads from media when valve is fully opened, and equipped with gland follower. Guides for disc on rising stem valves shall be machined for accurate fit.

D. Globe valves shall be equipped with packing suitable for intended service. (Under no circumstances is asbestos acceptable.) Globe valves shall be designed so back seating protects packing and stem threads from media when valve is fully opened, and equipped with gland follower.

E. Ball valves shall have FULL port opening blow out proof stem: hard chrome plated forged brass ball, rated not less than 600# W.O.G.

F. Provide gear operators on butterfly valves 8" and larger. Valve bodies shall have extended necks to provide for 2-1/4" insulation.

G. Provide valves with features indicated and where not otherwise indicated, provide proper valve features as outlined in this specification. Comply with ANSI B31.1.

H. Valve flanges shall comply to ANSI B16.1 (cast iron), ANSI B16.5(steel), ANSI B16.24 (bronze).

I. Threaded valve ends shall comply with ANSI B2.1.

J. Butt-Weld valve ends shall comply with ANSI B16.25.

K. Solder Joint valve ends shall comply with ANSI B16.18.

L. Flangeless valve bodies shall be manufactured to fit between flanges and shall comply with ANSI B16.1 (cast iron), ANSI B16.5 (steel), or ANSI B16.24 (bronze).

M. Fabricate pressure-containing components of valves, including stems and seats from brass or bronze materials, of standard alloy recognized in valve manufacturing that resist de-zincification.

N. Design seat of valve with removable disc, and assemble valve so disc can be replaced when worn.

O. Butterfly valves shall be designed for flow regulation, and manufactured to be tight in closed position. Test pressures in accordance with MSS SP-67 as follows: Seat 2-12" 220psi. No leakage shall be permitted under test.

2.2 BALL VALVES

A. Threaded Ends 3" and Smaller: 600# W.O.G., forged brass two piece body, hard chrome plated forged brass ball, blow-out proof stem.

B. Soldered Ends 2" and Smaller: 600# W.O.G., forged brass two piece body, hard chrome plated forged brass ball, true adjustable packing nut ("O"-ring only type stem seal not acceptable), blow-out proof stem..

C. Flanged Ends 2-1/2” and larger: Class 150, flanged ends, carbon steel body with 316 ss trim, uni-body design, full port, blowout proof ss stem and ball, telfon seat.

PART 3 EXECUTION

3.1 WORKMANSHIP AND INCIDENTAL ITEMS

A. All valves shall be installed so as to be easily accessible for cleaning, inspection, maintenance, and operation.

B. Install valves with stems pointed up, in vertical position where possible, but in no case with stems pointed downward for horizontal plane unless unavoidable. Provide chain operators on all valves over 6' above floor in mechanical rooms.

C. Major control and sectionalizing valves throughout building shall be identified by means of a brass valve tag bracketed to valve handle. Contractor shall prepare schedule of such identifying plates and frame under glass for installation in main equipment room.

D. No piping of dissimilar metals placed in contact or in close proximity with each other. Provide dielectric waterways wherever piping of dissimilar metals is joined.

E. Run all piping concealed unless specifically noted otherwise, making all necessary offsets, turns, etc., necessary to conceal piping from view.

F. Provide all necessary steel frame supports, anchor bolts, sleeves, etc., required for safe support of equipment and piping installed under this contract. The Mechanical Contractor shall be completely responsible for the accurate position and dimensions of all foundations and support items.

END OF SECTION 220500

SECTION 221100 - PLUMBING

PART 1 - GENERAL

1.1 RELATED DOCUMENTS

A. The General Provisions of the Contract, including General and Supplementary Conditions and General Requirements apply to the work specified in this Section.

1.2 DESCRIPTION OF WORK

A. Furnish and install new fixtures, waste, vent, storm drain, cold water and hot water piping shown on plans.

B. Connections of all equipment and fixtures with accessory fittings, shut-off valves, trimmings, traps, structural supports, insulation, etc., as herein specified and/or as shown on drawings.

C. Refer to SECTION 230500 which is applicable to this Section.

D. Include (but not necessarily limited to) the following items of mechanical equipment, fixtures and materials installed and in a first class operating condition:

1. All labor, materials, equipment, accessories, and miscellaneous items required to provide a complete plumbing system. Provide adequate supervision at all times during the progress of the work.
2. All plumbing piping and hangers for same as specified herein and where shown on the Architectural and/or mechanical drawings.
3. New water service and connection to water distribution.
4. New sewer service with connections to service mains and piping distribution.
5. All sewer, waste and vent piping and all cleanouts necessary for a complete operation installation as shown on mechanical drawings, or as required by the State and Local Sanitary Codes.
6. Temporary water, sanitary, etc., facilities during construction period.

1.3 QUALITY ASSURANCE

A. Manufacturer: Provide plumbing fixtures and accessories for work in this Section produced, meeting the requirements specified.

B. Soldering processes shall conform to ASME B31.3 Process Piping and Copper Development Association recommended practices.

PART 2 - PRODUCTS

2.1 SANITARY SEWER

A. Cleanouts in sanitary lines, both inside and outside at building, cast-iron body caulking ferrules with brass thread flanged plugs.

B. Cleanouts shall be installed in each change of direction of sewer lines where more than a 45 degree angle turn is made. Cleanouts shall be provided within 18” of each sanitary tee.

C. Cleanouts on underground lines shall be brought to a cast-iron cleanout box, with service marking, 1/2" thick flanged type and loose cover. Provide 12" X 4" thick concrete slab around cover and frame.

D. Size and distance between cleanouts shall be required by local authorities and/or as indicated on drawings.

E. All soil, waste and vent piping (including sewer forced main) shall be solid core, pressure rated schedule 40 PVC with solvent weld fittings. Pipe and fittings shall conform with ASTM D 2665.

2.2 DOMESTIC WATER

A. Ball valves shall be provided where indicated on drawings and shall be designed for a minimum water working pressure of not less than one hundred fifty (150) pounds per square inch. Each underground valve shall be protected by a cast-iron valve box with minimum thickness of 3/16 inch. The cover shall have the word "WATER" cast in the metal.

B. All cold water pipe and fittings shall be rigid PVC with a cell class of 12454 as identified in ASTM D 1784. PVC schedule 40 pipe shall be IPS conforming to ASTM D 1785. Injection molded PVC schedule 40 fittings shall conform to ASTM D 2466. All pipe shall be manufactured in the USA. Pipe joints shall be solvent cement with a 2-step process conforming to ASTM D 2564.

   All underground water piping shall have a metallic tracer tape installed 24” below grade along the length of the pipe. In addition provide a #10 AWG tracer wire secured to the piping with plastic zip ties along the length of the piping.

C. All cold water piping shall be cleaned and sterilized for use in potable water system per State Sanitary Code Requirements.

2.3 VALVES, STRAINERS, UNIONS AND FITTINGS

A. General - All material shall be new, of the best quality with same brand or manufacturer for all similar installations. SEE SECTION 220500 for type and manufacturer.

2.4 DUPLEX SUBMERSIBLE LIFT STATION

General

A) Contractor shall furnish all labor, materials, equipment and incidentals required to provide a complete pumping system as specified herein.
B) The MTM rail system shall include 2 submersible non-clog sewage pumps, discharge elbow, connecting flange assembly, guide connector, upper guide bracket, lifting chain or cable, assess frame and hatch cover, float mounting bracket, control equipment, guide rails (2" guide galvanized or stainless steel pipe) and discharge piping.
C) Refer to separate specifications for pumps and control equipment.

Operating Conditions.

A) Each pump shall be rated 3 H.P., 208 volts, 3 phase, 60 hertz, 3450 R. P. M. The unit shall produce 50 gpm at 40'ft TDH, with a minimum pump efficiency of 32% and maximum input kW of 3.2 kW. The pump shall be capable of handling a 2" spherical solid. The pump shall be non-overloading throughout the entire range of operation without employing service factor. The pump shall reserve a minimum service factor of 1.15. The performance curve submitted for approval shall state in addition to head and capacity performance, the pump efficiency, solid handling capacity, and reflect motor service factor.

Construction

A) The pump shall be a centrifugal, non-clog, solids handling, submersible, wastewater type, model S3HRC as manufactured by Hydromatic Pumps or prior approved equal. The pump volute, motor and seal housing shall be high quality gray cast iron, ASTM A-48, Class 30. The pump discharge shall be fitted with a 3" standard ASA 125 lb. flange, faced and drilled. All external mating parts shall be machined and Buna N Rubber O-ring sealed on a beveled edge. Gaskets shall not be acceptable. All fasteners exposed to the pumped liquids shall be 300 series stainless steel.

Electrical Power Cord

A) Electrical power cord shall be STW-A, water resistant 600 V, 60℃., UL and CSA listed and applied dependent on amp draw for size.

B) The pump shall be triple protected with a compression fitting and two epoxy potted areas at the power cord entry to the pump. A separation between the junction box area of the pump and the motor by a stator lead sealing gland or terminal board shall not be acceptable.

C) The power cable entry into the cord cap assembly shall first be made with a compression fitting. Each individual lead shall be stripped down to bare wire at staggered intervals, and each strand shall be individually separated. This area of the cord cap shall then be filled with an epoxy compound potting which will prevent water contamination to gain entry even in the event of wicking or capillary attraction.

D) The power cord leads shall then be connected to the motor leads with extra heavy connectors having brass inserts with a screwed wire to wire connection, rather than a terminal board that allows for possible leaks.

E) The connection box wiring shall be separated from the motor housing wiring by stripping each lead down to bare wire, at staggered intervals, and separating each strand. This area shall be filled with an epoxy compound potting. Fiberglass terminal boards which are subject to heat fatigue and cracking, and which may lead to possible leaks shall not be acceptable.

F) The cord cap assembly where bolted to the connection box assembly and the connection box assembly where bolted to the motor housing shall each be sealed with a Buna N Rubber O-ring on a beveled edge to assure proper sealing.

Motor

A) The stator, rotor and bearings shall be mounted in a sealed submersible type housing. The stator windings shall have Class F insulation, (155℃ or 311℉), and a dielectric oil filled motor, NEMA B design. Further protection shall be provided by on winding thermal sensors. Because air-filled motors do not dissipate heat as efficiently as oil-filled motors, they shall not be acceptable.

B) The pump and motor shall be specifically designed so that they may be operated partially or completely submerged in the liquid being pumped. The pump shall not require cooling water jackets. Dependence upon, or use of, water jackets for supplemental cooling shall not be acceptable.

C) Stators shall be securely held in place with a removable end ring and threaded fasteners so they may be easily removed in the field without the use of heat or a press. Stators held by a heat shrink fit shall not be acceptable. Stators must be capable of being repaired or rewound by local motor service station. Units, which require service only by the factory, shall not be acceptable. No special tools shall be required for pump and motor disassembly.

D) Pump shall be equipped with heat sensors. The heat sensor(s) (one on single phase, two on three phase) shall be a low resistance; bi-metal disc that is temperature sensitive. It shall be mounted directly on the stator windings and sized to open at 120℃ and automatically reset at 30-35℃ differential. The sensors shall be connected in series with motor starter coil so that the pump cease operation when an over-temperature condition is sensed. The starter shall be equipped with 3 leg overload relay with heaters sized for the pump's full load amps. The pump shall cease operation when the overload is tripped. The overload shall be manually reset.

Bearings And Shaft

A) An upper radial bearing and a lower thrust bearing shall be required. These shall be heavy-duty single row ball bearings which are permanently lubricated by the dielectric oil which fills the motor housing. Double row, sealed grease packed bearings shall not be acceptable. Bearings that require lubrication according to a prescribed schedule shall not be acceptable. The upper radial bearing shall have a minimum B-10 life at the specified condition of 40,000 hours and the lower thrust bearing shall have a minimum B-10 life at the specified condition of 40,000 hours. Bearings shall be locally available.

B) The shaft shall be machined from a solid 400 series stainless steel forging and is a large diameter design with minimum overhang to reduce shaft deflection and prolong bearing life.

Seals

A) The pump shall have two mechanical seals, mounted in tandem, with an oil chamber between the seals. John Crane Type 21, BF1C1, seals shall be used with the rotating seal faces being carbon and the stationary seal faces to be ceramic. The lower seal shall be replaceable without disassembly of the seal chamber and without the use of special tools. Pump-out vanes shall be present on the backside of the impeller to keep contaminates out of the seal area. Units that require the use of tungsten-carbide seals or foreign manufactured seals shall not be acceptable. Seals shall be locally available.

B) The pump shall be equipped with a seal leak detection probe and warning system. This shall be designed to alert maintenance personnel of lower seal failure without having to take the unit out of service for inspection or requiring access for checking seal chamber oil level and consistency.

C) There shall be an electric probe or seal failure sensor installed in the seal chamber between the two tandem mechanical seals. If the lower seal fails, contaminants which enter the seal chamber shall be detected by the sensor and send a signal to operate the specified warning device.

D) Units equipped with opposed mechanical seals shall not be acceptable.

Impeller

A) Impeller shall be of the vortex multi-vane non-clogging design and have pump-out vanes on the backside of the impeller to prevent grit and other materials from collecting in the seal area. Impeller shall not require coating. Because most impeller coatings do not remain beyond the very early life of the impeller, efficiency and other performance data submitted shall be based on performance with an uncoated impeller. Attempts to improve efficiency by coating impeller shall not be acceptable. The impeller shall be manufactured from ASTM A-48, Class 30 material

B) Impellers shall be dynamically balanced. The tolerance values shall be listed below according to the International Standard Organization grade 6.3 for rotors in rigid frames.

RPM	Tolerance
3500	.01 in. - oz./lb. of impeller weight

C) The impeller shall be threaded to the shaft. A300 series stainless steel washer and impeller bolt shall be used to fasten the impeller to the shaft. Straight end shafts for attachment of the impeller shall not be acceptable.

Casing

A) The casing shall be of the end suction volute type having sufficient strength and thickness to withstand all stress and strain from service at full operating pressure and load. The casing shall be of the centerline discharge type. The design shall be such that the pumps will be automatically connected to the discharge piping when lowered into position with the guide rails. The casing shall be accurately machined and bored for register fits with the suction and casing covers.

Painting

A) The pump shall be painted after assembly, and testing, with a dark green water reducible air dry enamel. The paint shall be applied in one coat covering all exterior surfaces. The pump shall be air dried after testing and before painting.

Serviceability

A) The complete rotating assembly shall be capable of being removed from the volute without disturbing discharge piping or volute. The motor housing, seal housing with seal plate and impeller still attached to the shaft shall be capable of being lifted out of the volute case from the top as one assembly.

Support

A) Though the pump may not require feet to support the unit while installed, the pump volute must have feet to support the unit when removed for service. Units which do not have feet upon which the unit can be supported when removed for service shall not be acceptable.

Testing

A) Commercial testing shall be required and include the following:

1. The pump shall be visually inspected to confirm that it is built in accordance with the specification as to HP, voltage, phase and hertz.

2. The stator motor leads shall be tested for integrity using a meg-ohm meter at the highest setting.

3. Pump shall be allowed to run dry to check for proper rotation.

4. Discharge piping shall be attached; the pump submerged in water and amp readings shall be taken in each leg to check for an imbalanced stator winding. If there is a significant difference in readings, the stator windings shall be checked with a bridge to determine if an unbalanced resistance exists. If so, the stator shall be replaced.

5. The pump shall be removed from the water, meg-ohm meter tested again, dried and the motor housing filled with dielectric oil.

Discharge Base Elbow.

A) The discharge elbow designed to mount directly to the sump floor shall be supplied for each pump. It shall have a standard 125-pound flange faced and drilled on the outlet side, with a machined mating inlet connection. The design shall be such that the

pump to discharge connection is made without the need for any nuts, bolts or gaskets. The base elbow shall also anchor and align the two, 1.5” guide rails.

Connecting Flange

A) A cast iron connecting flange/rail bracket shall be mounted on each pump discharge. It shall have a machined mating flange, which matches the base elbow discharge connection. Dealing of this discharge connection shall be accomplished by a simple linear downward motion of the pump culminating with the entire weight of the pumping unit supported entirely by the base elbow.

Upper Guide Bracket.

A) The upper guide bracket shall align and support the two guide rails at the top of the sump. It shall bolt directly to the hatch frame and incorporate an expandable rubber grommet for secure rail installation.

Lifting Chain/Cable

A) Each pumping unit shall be provided with a lifting chain or cable, and be of sufficient length to extend from the pump to the top of the wet-well. The access frame shall provide a hook to attach the chain or cable when not in use. The lifting chain or cable shall be sized to the pump weight.

Pump Basin

The fiberglass basin shall be 60” diameter and 72” deep with a aluminum, gasket sealed sump cover.

A) Materials

Resin: The resins used shall be a commercial grade unsaturated polyester resin (isophthalic). Basins/wetwells utilizing orthophthalic resin shall not be considered acceptable.

Reinforcing Materials: The reinforcing materials shall be commercial grade “E” type glass in the form of mat, chopped roving, roving fabric, or both, having a coupling agent that will provide a suitable bond between the glass reinforcement and the resin.

Fillers and Additives: Fillers of any type shall not be utilized. Additives, such as thixotropic agents, catalysts, promoters, etc., may be added as required by the specific manufacturing process to be used to meet the requirements of this specification. The resulting reinforced-plastic material must meet the requirement of this specification.

B) Workmanship

Exterior Surface: The exterior surface shall be relatively smooth with no sharp projections. Hand-work finish shall be utilized to insure that enough resin is present to eliminate exposed fibers. The exterior surface shall be free of delamination, exposed fibers and blisters larger than 0.5” in diameter.

Interior Surface: The interior surface shall be resin rich with no exposed fibers. The surface shall be free of crazing, delamination, blisters larger than 0.5” in diameter, and wrinkles of 0.125 in or greater in depth.

Dimensions: The dimensions shall be as shown on the drawings.

Wall Stiffness: The basin/wetwell shall have a pipe stiffness as shown below (per 1984 ASTM standard No. D3753, Table 1):

BASIN/WETWELL DEPTH (in X ft)	PIPE STIFFNESS
3-6	.72
6.5-12	1.26
12.5-20	2.01

Material Properties: The following properties shall be established for each type of construction used in the basin/wetwell.

Material Composition: The wall and bottom laminates shall have a glass content of 25% 6 5%.

Flexural Strength and Modulus: The flexural strength and modulus of the basin/wetwell wall in the hoop and axial directions shall be a minimum of 800,000 PSI.

Hardness: The minimum barcol hardness shall not be less than 90% of the resin manufacturers minimum value for the cured resin.

Thickness: The basin/wetwell wall thickness shall be adequate to maintain structural integrity when installed in the following conditions.
1) Soil modulus of 700 PSI
2) Soil density of 120 lbs. per cu. ft.
3) Luscher's safety factor of 2

Sump Cover

A) The sump cover shall be fabricated of aluminum material and shall have a minimum of ¼" thickness on sump basin of 60" dia. or smaller and a minimum of 3/8" thickness on sump basin of 54" or larger. Aluminum hatch cover shall contain a gasket to completely seal the sump cover to the basin so as to not permit the escape of odorous gases into the air.

Guide rail

A) The dual rail guide design keeps the pump in proper alignment with the stationary discharge piping. These rails shall be 1.5" stainless steel pipe which bolt directly to the base elbow and to the access frame at the top of the wet-well by an upper guide rail bracket.

Piping

A) Piping shall include one (1) swing check valve with outside lever and spring, one (1) plug/gate valve and all the necessary gaskets, straight pipe, bracket, elbows, tees, and fittings. All piping should be coated with coal tar epoxy or equal for corrosion resistance. Where piping passes through a wall, welding or sealing concrete shall be used to make a watertight joint.

Controls

General: Provide a duplex pump control panel including the following control functions and auxiliaries:

A) Two properly sized circuit breaker combination starters with NEMA Class 10, ambient compensated overload protection and individual phase failure protection.

B) Manual-Off-Automatic selector switch, green running pilot light, red failure pilot light, and red seal failure pilot light for each pump.

C) A PUMP NO. 1 LEAD-ALTERNATE-PUMP No. 2 LEAD sequence selector switch to select either pump as lead pump or to select that the pumps alternate as lead pump on each call for cycle.

D) Level inputs for: stop, lead pump start, lag pump start and high water alarm. The power applied to the level sensors shall be a maximum of 24 VAC with a current of less than 30 ma for intrinsic safety and shall be optically isolated.

E) LED indicators for each level input.

F) A field adjustable failure time delay for each pump. Controls to start the lag pump at the lead pump start level if the lead pump selector switch is placed in the off position. If a pump fails, the remaining functional pump shall remain the lead pump on future cycles. The failed pump shall only be called to operate at the lag pump operating level. Normal pump alternation shall resume when failure condition is corrected and pump has been reset.

G) Soft stop feature to require the pumps to stop three (3) seconds apart during the condition that both pumps are running when signaled to stop to prevent water hammer. Soft start feature to require the pumps to start three (3) seconds apart during conditions that the lead and lag pumps are called for simultaneously.

H) Field adjustable controls to delay starting each pump in the automatic mode during conditions that the lead and lag pumps are called for simultaneously.

I) A red high water alarm light and common exterior alarm light with red Lexan lens. The exterior alarm light shall burn dimly during normal conditions to indicate power on and lamp good, and shall flash brightly during water high level, pump failure or seal failure.

J) Pump failure, pump seal failure and high water alarm red pilot lights shall flash when activated.

All selector switches, pilot lights and other panel mounted devices shall be mounted on an interior deadfront panel. The deadfront panel shall be constructed of anodized aluminum and shall have a continuous aluminum hinge. The control panel enclosure shall be constructed of minimum 14 gauge, galvanized steel with baked on enamel finish, shall have means for padlocking and shall be rated NEMA 3R.

Warranty

A. The pump unit or any part thereof shall be warranted against defects in material or workmanship within one year from date of installation or 18 months from date of manufacture, whichever comes first, and shall be replaced at no charge with a new or manufactured part, F.O.B. factory or authorized warranty service station. The warranty shall not assume responsibility for removal, reinstallation or freight, nor shall it assume responsibility of incidental damages resulting from the failure of the pump to perform. The warranty shall not apply to damage resulting from accident, alteration, design, misuse or abuse.

PART 3 - EXECUTION

3.1 WORKMANSHIP

A. All piping, waste and stacks shall be run below elevated walkways unless otherwise noted. Piping in areas without walkways shall be run on the ground and supported above ground a minimum of 6”. The entire installation must present an appearance truly in keeping with the best practice and indicative of skill and neatness. In areas of exposed ceilings piping shall be grouped together and run on common pipe hangers with piping run parallel to building lines.

B. All material shall be installed in a neat and workmanlike manner by competent specialists for each sub-trade. The installation of any materials and equipment not meeting these standards may be condemned by the Architect and shall be removed and re-installed at no additional cost to the Owner. Contractor is responsible for the safety and good condition of the materials installed until final acceptance by the Owner.

3.2 INSTALLATION

A. Pipe shall be laid to the grades and alignment indicated on the drawings. Each pipe shall be laid line to line and grade and in such manner as to form a close concentric joint with the adjoining pipe and to prevent sudden offsets of the flow line. The interior of the pipe shall be cleaned of all dirt and superfluous materials of every description. Trenches shall be kept free from water until the pipe joining material has set and pipe shall not be laid when the conditions of the trench or the weather is unsuitable for such work. At times when the work is not in progress, open ends of pipe and fittings shall be securely closed, so that no trench water, earth or other substance will enter the pipe or fittings. Minimum compacted pipe coverage shall be 2'-0", or as indicated on drawings.

B. Where the location of the sewer is not clearly defined by dimensions on the drawings, the sewer shall not be run closer horizontally than 6'-0" to water supply main except that the bottom of the water pipe will be at least twelve (12") inches above the top of the sewer pipe, both pipes may be lain in the same trench. Where sewer mains cross above water services the sewer piping for a distance of ten (10') feet each side of the crossing shall be cast-iron without any joint closer horizontally than three (3') feet to the crossing.

3.3 SANITARY SEWER PIPING

A. New piping shall be a complete system to waste lines from all fixtures. The modular building fixtures have individual waste connections at each fixture below the floor that need to be connected by this contractor. Typical floor plan layouts are shown on the drawings.

B. All waste lines shall be installed on a continuous waste and vent system as required by codes and/or regulations.

C. All piping shall be installed straight and true and sized as indicated on drawings.

D. All changes in direction shall be made by the use of 45 degree wyes, double wyes, long sweep quarter bend or 1/8 bends, except that single sanitary tees may be used on vertical stacks. Tees and crosses may be used in vent pipes.

E. Cleanouts easily accessible shall provide at the foot of each vertical waste or soil stack. Cleanouts shall be of nominal size as the pipes up to four (4") inches and not less than four (4") inches for larger pipes. The distance between cleanouts in horizontal lines shall not exceed those distances required by local authorities, whether indicated or not.

F. All cleanouts installed so as to be easily accessible, and all outside cleanouts installed flush with finished grade.

G. Horizontal soil or waste lines shall be run at uniform grade of not less than 1/4" per foot. Horizontal lines shall be supported or anchored at intervals specified in BASIC MATERIALS AND METHODS. All stacks shall be supported at their base and every floor to the roof line and pipes shall be rigidly secured.

3.4 COLD WATER SYSTEMS

A. This installation comprises a complete and operating system of cold water distribution and connection to each modular building at one connection point.

B. All ends of tubing shall be square cut and burrs removed before assembling. Joints shall be thoroughly cleaned with sandpaper or emery cloth before applying the flux.

C. All water supply piping, fittings, and fixtures shall be protected against water hammer shock, or surge pressure, by adequate air chambers.

D. Pitch all piping to low points to allow for system drainage.

3.5 MISCELLANEOUS ITEMS OF WORK

A. Contractor shall be responsible for securing all information and data for connection to all utilities and pay all costs including meter fees and connection fees.

B. Contractor shall provide temporary water and sewerage on site for use during construction period as required.

C. All valves shall be installed so as to be easily accessible for cleaning, inspection maintenance, and operation.

D. Provide access panels at all concealed valves.

E. All welded piping to be welded by Certified welders skilled in the work to be done.

F. No piping of dissimilar metals placed in contact or in close proximity with each other. Provide bronze valves wherever piping of dissimilar metals is jointed.

G. Provide all necessary steel frames supports, anchor bolts, sleeves, etc., required for safe support of equipment and piping installed under this contract. The Mechanical Contractor shall be completely responsible for the accurate position and dimensions of all foundations and support times.

END OF SECTION 221100

SECTION 230500 - BASIC MATERIALS AND METHODS

PART 1 - GENERAL

1.1 RELATED DOCUMENTS

A. The General Provisions of the Contract, including General and Supplementary Conditions and General Requirements apply to the work specified in this Section.

B. Separation of specifications into sections is for convenience only and is not intended to establish limits of work or liability. The following are the Sections that will apply to this project.

230500 - Basic Materials and Methods
221100 - Plumbing
220500 - Valves, Strainers, Unions and Fittings

1.2 DESCRIPTION OF WORK

A. The work to be done under this heading includes the furnishing of labor, materials, equipment, and service necessary for and reasonably incidental to the proper completion of all mechanical work as shown on the drawings and herein specified.

B. Visit and examine the job site, and with all authorities concerned in order to become familiar with all existing conditions pertinent to the work to be performed thereon. No additional compensation will be allowed for failure to be so informed.

C. Materials and equipment shall be new, except where otherwise indicated, of the best quality, with same brand of manufacturer for all similar material. All equipment shall be installed in accordance with manufacturer's requirements. Equipment with electrical components shall be laboratory tested.

D. All work shall be performed in a neat and workmanlike manner, and in accordance with all codes, standards, and requirements of the industry. All workers shall be trained in the tasks they perform. Training shall be by an industry accepted trade school.

E. In general, provide the installation of plumbing complete with all piping, fittings, fixtures, equipment, etc.

F. Regardless of titles and subdivisions herein employed, consider these specifications as one complete document with General Section applying to all other sections. All bidders are cautioned to read entire specifications and to thoroughly familiarize themselves with all requirements thereof.

G. Check all specifications and all drawings and bring to attention any conflicts or variations as shown as noted.

H. Specifications and accompanying drawings apply to all contracts or sub-contracts entered into for supplying material or labor for construction of work specified herein and shown on drawings.

I. Protect Owner and his agents including Construction Manager, Architect and/or Engineer from any and all damages and expense arising from fulfillment of contract and at completion of work repair all damages done.

J. For any points which are not clear, or for items and/or details which the Contractor feels are in need of clarification, consult the Architect before submission of a proposal.

K. The drawings and the specifications are complementary and what is shown and/or called for on one shall be furnished and installed the same as if shown and/or called for in the other.

L. In case of discrepancies and/or ambiguities in the drawings and/or in the specifications, the Architect shall be consulted prior to submission of a proposal. Failure to do so on the part of the successful bidder shall be construed as explicit agreement on his part to abide by the Architect's decision in such matters.

M. The word "provide" as used in these Specifications and on the Drawings shall be termed to mean "furnish and install".

N. Contractor shall include in base bid the connection of all sewer and water piping to mains as shown on the drawings. Contractor shall include all material and all costs for complete installation.

O. If the Contractor notices during the bidding any items of the contract documents which will violate any applicable code, these items shall be brought to the attention of the Architect before the bid date. Failure to bring these items to the attention of the Architect shall be construed as explicit agreement that the Contractor has included in his bid price any and all modifications necessary to complete the project in accordance with all applicable codes.

1.3 RELATED WORK SPECIFIED IN OTHER SECTIONS

A. Piping and ductwork penetrations through fire rated partitions/floors shall be fire sealed in accordance with the UL fire resistance directory. See Sealant Specification for materials. The integrity of the fire rating, as indicated on the architectural drawings, shall be maintained.

1.4 QUALITY ASSURANCE

A. The Contractor bidding on this portion of the work must be fully experienced in installations of equal size, complexity, and quality, and must be licensed to perform such work as required by the Louisiana State Legislature, R.S.37:2152-2163.

B. In bidding he acknowledges that he fully understands the scope of work and design, and has the ability for the contract price to assemble and install the equipment, piping and ductwork shown or specified, so as to mold same into a satisfactory workable system and arrangement.

C. Contractor shall recognize that a fault or error in his work remains his responsibility regardless of whether such difficulty was discovered after the work had progressed, and shall make corrections at no cost to the Owner.

D. Adequate and competent constant supervision shall be provided by Contractor to assure that work is done in accordance with good standard practice and workmanship and with intent of drawings and specifications. Contractor shall recognize that amount of information and detail could be provided to contract documents is limitless and could extend into every minute detail and sequence of operations, to a point where only workmen would be required, without drawing on ability, experience and ingenuity of the Contractor.

E. All work shall be installed in strict accordance, with all existing local and state codes and ordinances, with National Board of Fire Underwriters

F. This Contractor shall secure all permits and inspections and shall pay all fees and taxes and shall provide Owner with certificates of approval from agencies having jurisdiction over various phases of work.

G. Contractor shall maintain and service all equipment until time of acceptance by Owner. Contractor shall include all required service access in the installation as required by the manufacturer and governing codes.

H. Prior to starting any work, the Contractor shall submit a quality assurance plan for approval by the Architect. In the quality assurance plan, the Contractor shall provide the following information:

1. List of all sub-contractors and equipment suppliers.
2. List of all foreman and job superintendents including job experience for all trades.
3. Construction time schedule demonstrating coordination with other trades and showing detailed time lines for test and balance and commissioning being completed prior to final punch list inspection.

1.5 SUBMITTALS

A. Shop Drawings and Submittal Data required:

1. Submit to the Architect for review, complete descriptive information and dimensional data on all items of equipment, materials and accessories, including duct, equipment and sprinkler layouts. Piecemeal submissions shall not be approved. Written approval thereof must be obtained before ordering or installation. The following shall be submitted:

Piping layout Plumbing layout

Plumbing materials
Lift Station
Valves, strainers, unions & fittings

2. Shop drawings and submittal data shall be considered to be instruments of service only and submitted for the sole purpose of convenience to the Contractor to assist him in the performance of the contract. The Architect's review of the shop drawings and submittal data shall not supersede these specifications, the accompanying drawings, or the contract terms, unless specifically covered by a properly executed change order, and then only to the extent specifically and explicitly stipulated therein.

3. Submit in accordance with requirements of Architectural Sections, Division 1.

B. After completion of project Contractor shall turn over to the Architect complete operating and maintenance instructions including listing of supply and repair items and locations of places to purchase same. Comply with requirements of Division 1 Sections.

C. Substitutions:

1. All material, equipment, methods, and accessories entering into the work under this section of contract are subject to approval or disapproval of the Owner. Approval of any manufacturer, material, or product shall not constitute a waiver of Owner's right to demand full compliance with contract requirements, including shape, size, quality and performance.

2. Equality of materials is that established by opinion of Owner. Decision of Owner is final.

3. Whenever a material or article of equipment is specified by use of a proprietary name, or by naming the manufacturer or vendor, any material or article which will perform adequately the duties imposed by the design will be considered for substitution, providing it is of equal substance, and function, meets specifications, and is aesthetically acceptable to the Owner. Refer to Division 1 Sections for approval procedures.

4. Literature, technical data, etc., includes complete data and samples if necessary, with submissions for substitutions. Burden of proof that material offered for substitution is equal, or superior, in construction and efficiency to that named, rests on Contractor, and unless proof is satisfactory to Architect, substitution will not be approved. Contractor shall note any deviations from specified equipment with the substituted submittal. Failure to note deviations will result in rejection of substituted equipment and materials.

D. See Architectural Specifications for "As-Built" requirements.

1.6 PRODUCT DELIVERY, STORAGE AND HANDLING

Take necessary precautions to protect all material, equipment, apparatus and work from damage. Failure to do so to the satisfaction of the Architect will be sufficient cause for the rejection of the material, equipment or work in question. Contractor is responsible for the safety and good condition of the materials installed until final acceptance by the Owner. Comply with equipment manufacturer's requirements. No insulation or electrical components, shall be subject to water damage.

1.7 JOB CONDITIONS

A. Accompanying drawings, including plans, details, diagrams, notes, etc., are shown to limit and explain structural conditions, construction requirements, sizes, capacities and method of installation and erection. Structural and other conditions may require certain modifications and adjustments from conditions shown. Such deviations are permissible; however, specific sizes capacities and requirements affecting the satisfactory performance and operation of the installation shall remain unchanged. Make allowance for normal job conditions and interferences.

B. Whenever it becomes necessary to shift ducts or pipes or to change shape of ducts, such changes shall be referred to Architect for approval.

C. Ask for details whenever uncertain about method of installation. Lack of details not requested shall not excuse improper installation and correction shall be responsibility of Contractor. Contractor shall consult manufacturer for details specific to their items of equipment.

D. Schedule and perform all mechanical work to avoid delays to the Contractor and other trades.

E. All piping, cleanouts and covers, and other mechanical items in way of construction or remodeling, shall be rerouted, relocated or otherwise adjusted to work out with such construction or changes shown or specified in any or all of various sections of specifications. Unknown piping that is encountered will be referred immediately to Architect for method of disposition before continuation of work.

F. The Contractor shall review the architectural drawings to become familiar with the phasing of construction required for this project.

1.8 GUARANTEE AND SERVICE

A. Guarantee all equipment, materials, and workmanship for a period of one (1) year following date of acceptance.

B. During the period of guarantee any defects in equipment, materials, or workmanship shall be promptly corrected without cost to the Owner.

C. Guarantee includes equipment capacity and performance ratings specified without excessive noise levels. Any deficiencies in equipment capacity specified shall be promptly corrected.

D. Guarantee does not include maintenance items.

PART 2 - PRODUCTS

2.1 ACCESS PANELS

A. Provide all access panels necessary for proper access to valves, traps, fixture connections, control devices or other items installed under this contract.

B. Panels to be Milcor, Type M, or KARP Model D3C-214M hinged with screwdriver lock or as indicated on drawings for special locations, minimum size 12” x 12” or larger as required for proper access.

C. Exact locations for panels to be directed by Architect.

2.2 TOOLS AND SCAFFOLDING

Furnish all tools, equipment, scaffolding and other facilities required to properly and expeditiously perform the work.

2.3 SIPHON PREVENTORS

Furnish and install on all equipment and fixtures requiring same, backflow preventors or vacuum breakers of a type approved by the Louisiana Health and Human Resources. Water connections to fixtures and equipment shall be made in such a way as to prevent back siphonage when the water supply is out or the pressure drops. Provide reduced pressure type back flow preventors where indicated on drawings. They shall be Watts series 900 or Febco Series 825 for sizes 2” and smaller and Ames Colt Series C400 for sizes 2-1/2” and larger. Size as indicated on drawings.

2.4 SLEEVES AND THIMBLES

A. Pipe sleeves - wrought iron or cast iron of sufficient size for piping and installation to be installed in floors, walls below grade, and grade beams where piping passes through.

B. Thimbles above grade - heavy galvanized steel of proper size to allow freedom of piping and insulation, set in floor or roof slab as work progresses, also to be installed in wall and partitions where piping passes through.

C. Thimbles below grade - same as pipe sleeves above.

D. Sleeves through floors extend 1" above finished floor. Caulk around and seal all piping in chases and piping passing through floor slab.

E. Provide sleeve seals and shields for all pipe penetrations of ground floor slab.

F. Provide UL listed fire-stopping in all pipe penetrations of rated floors and walls, see Architectural Specifications for Requirements.

2.5 BUCKS, GROUNDS AND CHASES

A. Be responsible for proper location and sizes or for any errors or omission in placing same.

B. Failure to inform the General Contractor promptly of such requirements shall not relieve the Mechanical installer of the responsibility for providing a complete mechanical system.

2.6 HANGERS

A. Horizontal piping above grade without hubs shall be rigidly supported. Distance between pipe supports:

1.	1/2" pipe	6'-0" maximum
2.	3/4" pipe	7'-0" maximum
3.	1" pipe	8'-0" maximum
4.	1 1/4" pipe	9'-0" maximum
5.	1 1/2" pipe and over	10'-0" maximum

B. Hangers shall be similar to "Split Ring" type.

C. Metal strap or wire will not be acceptable.

D. For two or more systems of piping run parallel and with same grade trapeze hangers may be used.

E. Use #22 gauge galvanized sheet steel saddles, minimum 18” long between the pipe covering and each pipe hanger on all insulated lines. Saddles shall extend along pipe runs and at least half way up piping on each side.

F. All above grade horizontal sewer drain, vent, waste and similar piping shall be hung at every hub using the same type hangers as specified for other piping.

G. All underground piping under building shall be hung from slab with stainless steel hangers. See detail on drawings.

H. Rods supporting pipe hangers shall have the following dimensions:

½” to 2” pipe	3/8” rod
2-1/2” to 3” pipe	½” rod
4” to 5” pipe	5/8” rod
6” pipe	¾” rod
8” through 12”	7/8” rod

Rods for trapeze hangers shall be a minimum of 3/8” and shall have the equivalent cross section, listed above, per pipe supported.

2.7 PAINTING AND IDENTIFICATION

A. All underground plastic water piping shall have a 2” wide metallic tracer tape buried 24” below grade along the length of the piping. In addition provide a #10 AWG wire strapped to the piping with nylon tie wraps for the length of the piping run.

PART 3 - EXECUTION

3.1 EXCAVATION, TRENCHING AND BACKFILL

A. The Contractor shall perform all excavation of every description and of whatever substances encountered to the depths indicated on the drawings. During excavation material suitable for backfill shall be piled in an orderly manner a sufficient distance from the banks of the trench to avoid overloading and to prevent slides or cave-ins. All material not suitable for backfilling shall be removed completely from job site. Such shoring shall be done as hereinafter specified.

B. Trenches shall be of necessary width for the proper laying of the pipe and the banks shall be as nearly vertical as practicable. The bottom of the trenches shall be accurately graded to provide uniform bearing and support. Bottom of trenches shall have 6" layer of compacted limestone aggregate. Care shall be taken to provide uniform bearing and support.

C. Bell holes and depressions for joints shall be dug after compaction and grading in order that the pipe will be supported along its entire length. Whenever wet or otherwise unstable soil that is incapable of receiving the bottom preparation and support piping, as determined by the Engineer, is encountered, such soil shall be removed to the depth required and the trench backfilled to the proper grade with river sand.

D. All shoring required to perform and protect the excavation, and as required for the safety of employees, shall be installed. The sides of the trenches, four (4') feet or less shall be protected as required. For trenches more than four (4') feet in depth, the sides shall be secured by the use of continuous sheet piling and shall be not less than two (2") inches in thickness. Meet the minimum requirements of OSHA for trench shoring not described above.

E. The trenches shall not be backfilled until all required pressure tests are performed and until the certificates of inspection from the proper authorities are obtained by the Contractor. The trenches shall be carefully backfilled with the excavated materials approved for backfilling consisting of earth, loam, sandy clay, sand and gravel, or other approved materials free from large clods of earth or stone, deposited in six (6") inch layers and thoroughly and carefully rammed until the pipe has a cover of not less than two (2') feet. The remainder of the backfill material shall then be thrown into the trench in one (1') foot layers and tamped. Any trench improperly backfilled,

or where settlement occurs, shall be reopened to the depth required for proper compaction, then refilled and compacted, with the surface restored to the required grade and compaction, mounded over, and smoothed off. Sidewalks, drives and streets broken up by this work shall be repaired and returned to original condition.

3.2 FLASHING AND COUNTERFLASHING

All pipes and ducts that pass through roof and walls shall run so as not to interfere with the structural system and to permit proper application of base and counterflashing.

3.3 CLEANING, STERILIZING AND PIPING

A. When all work has been finally tested, Contractor shall clean all fixtures, pipes and exposed work.

B. All pipes shall be free from all obstructions.

C. All plated and other finished products shall be thoroughly cleaned and polished.

D. New water piping shall be sterilized as required by State Sanitary Code. Provide detailed reports describing sterilization method and duration for each piping section.

E. All piping shall be installed so that it may expand and contract freely without damages to equipment, other work, or injury to piping system. All necessary swing joints, expansion joints, or offsets to protect piping, etc., shall be installed whether indicated or not. Piping shall be graded to allow for system drainage.

F. Stainless steel or chromium plated floor, wall and ceiling plates shall be furnished on all exposed piping passing through floor, walls, or ceilings. Plates shall be secured in place with round head screws or toggle bolts of proper size and type for adjacent construction.

G. All piping shall be installed and sized as indicated on plans and be of equivalent materials to piping as hereinafter specified.

H. All piping shall be installed with runs arranged parallels or perpendicular to walls and ceilings with symmetrical and equal spacing between parallel pipes. Offsets shall be made using factory fittings, bending of piping shall not be accepted.

I. Notify Engineer a minimum 72 hours prior to enclosing piping in concealed spaces so that piping may be inspected.

3.4 TESTING AND INSTRUCTION

A. Piping shall be tested to pressure hereinafter specified. Where pressures are not mentioned, it shall be understood that testing to 1-1/2 times service conditions, before insulation is applied, will be acceptable. All tests shall be held for a minimum

of 24 hours before inspection. Test pressures shall not exceed the rated working pressure of any system component.

B. Furnish all necessary gauges, pumps, test plugs, and temporary connections and shall test sections of the building as work progresses.

C. All new underground sewerage and waste piping shall be plugged at outlets and tested hydrostatically to 10 psi before being covered. Sewer forced mains shall be tested to 50 PSI. Notify Engineer a minimum 72 hours prior to any backfill of underground piping so that piping may be inspected. Failure to notify Engineer prior to backfill will constitute a rejection of the underground piping installation. All other drainage piping, vent and waste risers shall be plugged and tested by filling with water from top to bottom of each floor prior to being connected to fixtures. Tests shall be held a minimum of 24 hours.

D. All new cold water supply piping shall be tested hydrostatically to 75 pounds per square inch before application of insulation. Test shall be held a minimum of 24 hours.

E. All tests shall be made in the presence of the Architect or his representative. Where pipes or connections in new piping are found to leak, they shall be made tight and the tests repeated.

3.5 CUTTING AND PATCHING

Cooperate to the fullest extent with all other trades to reduce to a minimum the amount of cutting and patching of other work necessary for this installation. Do not cut or patch the work of other trades but arrange to provide cutting templates in time, or otherwise pay the respective other contractors for changing theirs, to accommodate this work. No cutting into any structural units likely to impair the strength shall be done without the approval of the Architect.

3.6 CLEAN UP

Remove debris, surplus and waste materials, oil, grease or stains resulting from the work performed and leave the premises in a broom clean condition AT THE END OF EACH WORKING DAY. All debris, surplus and waste material shall be removed completely from the job site.

END OF SECTION 230500

SECTION 260500 - ELECTRICAL GENERAL

PART 1 - GENERAL

1.1 SUMMARY

A. Furnish all labor, tools, materials, fixtures, equipment, accessories, transportation, etc., required for complete electrical lighting and power systems, complete with necessary auxiliaries as indicated on drawings and as hereinafter specified.

B. The GENERAL CONDITIONS of the Contract and Architectural Drawings and Specifications shall apply to all work under this Section. Separation of Specifications into Sections is for convenience only and is not intended to establish limits of work or liability. The following are the Sections that apply to this project.

260500 - Electrical General
260600 - Electrical Materials and Methods
262000 - Electrical Service
270500 – Telecommunication Systems
275123 – Intercom Systems
283000 - Fire Alarm System

C. In general, the work shall consist of the following installations:

1. New Electrical Service with electrical distribution system.
2. Panelboards, feeders, switches and complete systems per plans.
3. Power wiring to all lift stations and modular buildings.
4. Electrical lighting and appliance systems complete with wiring, fixtures and lamps.
5. Wiring and connections for equipment indicated on Architectural drawings.
6. Complete and operational new fire alarm system.
7. Intercom system.
9. IT system.

D. Prior to submitting quotation for electrical work, Contractor shall visit and examine the job site in order to become familiar with all existing conditions pertinent to the work to be performed thereon. No additional compensation will be allowed for failure to be so informed.

E. It is the intent of these specifications that in all particulars, the materials and workmanship shall conform to the best practice and that the equipment and accessories as furnished and installed shall be complete and ready to operate.

F. All materials shall be new, except where otherwise indicated, and shall conform with the standards of underwriters' Laboratories in every case where such a standard has been established for the particular type of material in question.

G. The drawings showing the layout of electrical work indicate approximate location of the outlets, receptacles, panelboards and other electrical equipment, unless noted

otherwise. The runs of feeders and branches are schematic only and are not intended to show the exact routing of conduits. The final determination of the routing shall be governed by structural conditions, other conditions and other construction. The Contractor shall consult all drawings which may affect the location of any outlet, apparatus, or equipment to avoid possible interference and any reasonable changes in the location of an outlet, apparatus or equipment, up to the time of rough-in, is reserved by the Architect, and any minor deviations shall be made without additional cost. It shall be the Contractor's responsibility to see that all equipment such as junction boxes, panelboards, switches, and other apparatus, as may require maintenance from time to time, are made easily accessible. Although the location of the equipment may be shown on the drawings, the construction may disclose the fact that such location does not make its position readily accessible, in which case the Contractor shall call the Architect's attention to the condition before advancing the construction to a point where a change in location would require additional cost.

1.2 MEASUREMENTS

Because of the small scale of the drawings, it is not possible to indicate all offsets, fittings, and accessories necessary. The Contractor shall carefully investigate structural conditions, walls, furring and chase locations and room finishes and shall make actual measurements on the job so that the panelboards, switches, receptacles, lighting fixtures and accessories shall fit.

1.3 LAWS, CODES AND PERMITS

A. Latest edition of the following listed established standards constitute part of the specification requirements.

National Electrical Code, 2005 (NFPA No. 70)
Applicable State Requirements
Underwriters' Laboratories (UL)
Electrical Testing Laboratories (ETL)
American National Standard Institute (ANSI)

B. The Contractor shall apply for all permits and pay all fees incidental to the carrying on of the electrical work. This Contractor shall give notice to the Architect in ample time for the work to be inspected and approved as it progresses and no work shall be concealed until inspected and approved by Architect, should the plans or these specifications in any way conflict with the Code, or State Rules, these latter are to be followed, without expense to the Owner, but the Architect shall be notified of this condition and approval secured before changes are made.

C. Upon completion of the installation, a certificate of approval from the Electrical Inspection Department having jurisdiction thereon shall be furnished to the Owner, and all fees paid by the Contractor. The certificate of inspection shall not release the contractor from any defects to material, workmanship or installation, should any develop within one (1) year from the date of notice of acceptance of the work.

1.4 JOB CONDITIONS

A. Accompanying drawings, including plans, details, diagrams, notes, etc., are shown to limit and explain structural conditions, construction requirements, sizes, capacities and method of installation and erection. Structural and other conditions may require certain modifications and adjustments from conditions shown. Such deviations are permissible; however, specific sizes capacities and requirements affecting the satisfactory performance and operation of the installation shall remain unchanged. Make allowance for normal job conditions and interferences.

B. Ask for details whenever uncertain about method of installation. Lack of details not requested shall not excuse improper installation and correction shall be responsibility of the Contractor.

C. Schedule and perform all electrical work to avoid delays to the Contractor and other trades.

D. All piping, conduits, conductors and other electrical items in way of construction, shall be rerouted, relocated or otherwise adjusted to work out with such construction or changes shown or specified in any or all of various sections of specifications. Unknown electrical devices that are encountered will be referred immediately to Architect for method of disposition before continuation of work.

E. The Contractor shall review the architectural drawings to become familiar with the phasing of construction required for this project.

PART 2 - PRODUCTS AND INSTALLATION

2.1 APPROVALS

A. Name of manufacturer or catalog numbers are mentioned herein in order to establish a standard as to design and quality. Other products similar in design and of equal quality may be used if submitted to the Architect and approved by him.

B. Within thirty (30) days after award of General Contract, Contractor shall submit complete dimensional shop drawings and descriptive literature covering the following equipment and materials. Written approval thereof must be obtained before ordering or installation.

Panelboards	Wiring Devices and Plates	System	
Conductors	Safety Switches	Fire Alarm System	TVSS
Lighting Fixtures	Intercom System	Transformers	

C. Comply with requirements of Division 1 Sections regarding submittals, number of copies, and procedures.

2.2 PROTECTION OF FIXTURES, MATERIAL AND EQUIPMENT

A. Contractor shall continuously maintain adequate protection of all his work from damage and shall protect the Owner's property from injury or loss, except as may be caused by agents or employees of the Owner. He shall adequately protect adjacent property as provided by law.

B. Conduit openings shall be capped or plugged during installation. Fixtures and equipment shall be tightly covered and protected against dirt, moisture, chemical and mechanical injury. At the completion of the work, the fixtures, material and equipment shall be thoroughly cleaned and delivered in condition satisfactory to the Architect.

2.3 CUTTING, PATCHING, AND SEALING

A. All cutting and patching for the work of this Section shall be in accordance with the requirements of the GENERAL CONDITIONS. The Contractor shall perform all necessary cutting and patching required for the installation of work. Where floor or roof is cut or penetrated the structural integrity shall be maintained or restored. Cutting of structural members is prohibited except with prior approval of the Architect.

B. Penetrations of all walls, floors, and ceilings shall be sealed with a material capable of preventing the passage of flames and gases in accordance with the requirements of the test standard ASTM-E-814 for fire stops. The integrity of the fire rating, as indicated on the architectural drawings, shall be maintained. See Sealant Specification for materials.

2.4 CLEANING UP

A. This Contractor shall promptly remove from the jobsite all debris, surplus and waste materials, empty crates and cartons resulting from his work.

B. This Contractor shall remove all oil, grease or other stains resulting from his work performed in the building or the exterior thereof.

2.5 TESTING AND BALANCING

A. Make tests which may be required by the Owner or the Architect in connection with the operation of the electrical system in the building.

B. Balance all single phase loads connected to the panelboards in the building to insure an approximate equal division of these loads on main secondary power supply serving building.

C. All tests shall be made in accordance with the latest standards of the IEEE and the NEC.

D. The installation shall be tested for performance, grounds, and insulation resistance. "Megger" type instrument shall be used. Circuit continuity tests and operational tests on all equipment furnished and/or connected by him shall be made by the Contractor after such equipment has been installed.

E. The tests shall be made in the presence of the Architect or his representative. The Contractor shall notify the Owner or his representative. The Contractor shall notify the Owner and the Architect at least seventy-two (72) hours in advance of tests. The Contractor shall provide all testing equipment and all costs shall be borne by him. Written reports shall be made of all tests. All faults shall be corrected immediately.

F. Refer to the Electrical Feeder Diagram on the drawings and the NEC section 517 for additional testing required.

2.6 PAINTING

A. Contractor shall touch-up or refinish all items of electrical equipment furnished with a factory finish coat of paint and which may have been damaged regardless of cause.

B. All electrical equipment such as switches, panelboards, motor controllers, etc., shall be suitably identified with micarta nameplates.

C. See PAINTING SECTION for painting by others.

2.7 GUARANTEE

Upon completion of all tests and acceptance, the Contractor shall furnish the Owner a written guarantee covering all electrical work under this Contract for a period of one (1) year from date of notice of final acceptance. Upon notice from the Owner, Architect or the Consulting Engineer during the Guarantee period, the Contractor shall replace defective materials and correct faults of workmanship and repair any damage caused thereby promptly and free of any charge. Fuses and lamps are excluded from the guarantee.

2.8 CONTRACTOR'S QUALIFICATIONS

The Contractor, bidding on this portion (Electrical Division) must be licensed to perform such work as required by State and Local laws.

2.9 DIRECTORY CARDS, NAMEPLATES AND EQUIPMENT LABELS

Provide in the directory frame of each panelboard and for each feeder switch or circuit breaker, neatly typed directory cards indicating the room number and type of electrical load.

All equipment shall be labelled with unit designation. 120/208V equipment shall have black lettering. 277/480V equipment shall have red lettering.

All outlets shall have a label with panel and circuit designation.

2.10 SUBSTITUTION

A. All specified material, equipment, fixtures, etc., entering into the work under this section of contract are subject to the prior approval or disapproval of the Architect. Refer to Division 1 Sections for approval procedures.

B. Materials, equipment, fixtures, etc., herein named or indicated on drawings establish the type, size, appearance and quality required of products other manufacturers must meet to be acceptable.

C. Requests for substitutions must include necessary data to conclusively demonstrate equality in type, size, appearance, quality, etc. Any deviation in the opinion of Architect may be cause for rejection.

2.11 COMMISSIONING

A. Contractor shall install all items of equipment as identified in this specification in strict accordance with manufacturer's requirements (whether identified in this specification or not), shop drawings and contract documents. Contractor shall coordinate with Mechanical, and Temperature Control System Contractors to insure a complete installation. Start-up of all equipment shall be by manufacturer authorized representative. Start-up services shall be provided for as long a period of time as is necessary to insure proper operation of the equipment items. The start-up technician shall conduct all operating tests as required to insure the equipment is operating in accordance with design parameters. Complete testing of all safety and emergency control devices shall be made. The start-up technician shall submit a written report to the engineer (prior to final punch list inspection) containing all test data recorded as required above and a letter certifying that the equipment is operating properly.

B. Other specific items of commissioning shall be as follows:

1. All electrical outlets and devices shall be tested for proper operation. Receptacles shall be checked for proper hot, neutral and ground connections with suitable plug-in tester. Light switches, dimmers, photo cells, contactors and occupancy sensors shall be switched to check that the correct lights are controlled and that dimmers operate properly.

2. Test and balance all switchboard, panelboard and power feeders over 50 amps.

3. Measure voltage and ampacity at each panelboard and switchboard under full load conditions (as best as can be achieved) for each phase. Adjust transformer taps as required to maintain design voltage.

4. Test fire alarm system in accordance NFPA-72 and Section 283000 requirements. Test proprietary fire alarm reporting.

5. Electrical gear equipment supplier shall perform a coordination study based on feeder diagram, panel schedules and equipment loads to determine settings and adjustments on all electronic, GFI and adjustable breakers. Time/current characteristic curves shall be generated and settings adjusted accordingly.

6. Provide written reports for all tests described above prior to final punch list inspection.

7. See Feeder Diagram and NEC 517 for additional testing.

END OF SECTION 260500

SECTION 260600 - ELECTRICAL MATERIALS AND METHODS

PART 1 – GENERAL

1.1 RELATED DOCUMENTS

Applicable items of this Section shall apply to all sections of ELECTRICAL.

PART 2 - PRODUCTS AND INSTALLATION

2.1 METHODS OF WIRING

A. No wire shall be smaller than No. 12 except those for fixture drops and for control circuits of equipment. All wire shall have 600-volt insulation equivalent to type THHN/THWN unless otherwise noted on the drawings.

B. All wiring shall be run in conduits sized as shown on the drawings and as herein after specified. Conductors shall be continuous from outlet to outlet and no splices shall be made except in outlet or junction boxes.

C. Homeruns to panelboards may be collected in one or more conduits provided all circuiting is done in accordance with Code requirements and the maximum unbalanced current does not exceed the capacity of the neutral conductors.

D. Powdered soapstone or approved pulling compound shall be used as a pulling lubricant for all non-lead covered conductors.

E. All empty conduits installed shall contain a #14 fish wire.

F. Conduit sizes shall conform to the requirements of the National Electric Code and/or sizes shown on the drawings. Minimize size conduit shall be ½”.

G. Exterior conduits shall be Schedule 40 grey PVC. All power feeders to modular buildings shall be run under elevated walkways or modular buildings unless noted otherwise.

H. Underground conduits for branch circuit conductors shall be Schedule 40 PVC direct buried minimum 24” below grade. All underground conduits shall be installed with metallic marker tape buried 12” below grade, directly above conduit, and continuous for entire length of conduit. Underground feeders shall be encased in 2” of 3000 PSI concrete.

I. Solderless Fixed spring connectors (T & B 10-100, Ideal wrap-cap, or equal) shall be used for all branch circuit wiring and fixture connections on all conductors #10 AWG and smaller. Split bolt or 2 bolt connectors (T & B 6 HPW, O-Z Gedney PMX, or equal) shall be used for connections and splices on all conductors #8 AWG or larger.

J. Connections to all motors not equipped with a portable cord shall be made with a short piece of flexible metal conduit between rigid conduit system and motor terminal box. Ground bond of separate copper conductor shall be made between motor frame and rigid conduit system. In all outdoor locations, liquid tight flexible metal conduit shall be used.

K. All recessed fixtures, unless they contain a box approved for THW wire shall be wired with THHN, in four feet (4') of flexible metal conduit from a box at least one foot (1') from the fixture. Not more than two individual or two rows of continuous fixtures shall be connected to any one of these outlet boxes. This box shall be located above the ceiling and shall be accessible by removing fixture. Installation of blank covers on ceilings to provide access to such boxes will not be acceptable.

L. Splices in all low voltage wiring shall be made at terminal blocks furnished with the equipment. At junction boxes or where other splices are required, these splices shall be soldered.

M. Other routings than those indicated may not be used without the approval of the Architect, but Contractor shall make allowance for possible obstructions to routes indicated. Conduits shall be grouped together and run on common hangers parallel to building lines in areas of open ceilings.

N. Surface mounted raceways shall be 2-piece, steel, with all fittings and mounting hardware necessary for complete installation.

2.2 WIRING IN RACEWAYS

A. Conduit sizes shall conform to requirements of the National Electrical Code and/or sizes shown on drawings.

B. It is not mandatory that all conduits be routed as shown on the drawings. Other routings facilitating speed and ease of installation may be used, provided the general intent of these specifications is followed and the specific intent of the particular circuit or circuits and the National Electrical Code are not violated; such changes and must be approved by the Architect before work is done. Contractor shall make full allowances for possible obstructions to these routes, as no extra charges will be allowed for added lengths that may be necessary.

C. Conduits shall be installed in a neat appearing manner and shall be rigidly secured in place. The use of wooden plugs in masonry or concrete as a base to fasten raceways will not be permitted. Approved anchors only shall be used for this purpose. Exposed conduits shall be installed with runs arranged parallel or perpendicular to walls and ceilings, with rigid angle turns consisting of symmetrical bends, condulets and junction boxes. Bends and offsets shall be held to a minimum. Conduits shall be kept at least six (6") inches from parallel runs of hot piping flues, or other hot objects.

D. Conduits shall be cut with a hacksaw; ends must be square, threads cut and cleaned before reaming. Conduits must be securely fastened to all outlet and junction boxes with two locknuts and one bushing of approved make, care being exercised to see that full number of threads project through to permit bushings to butt up tight against

the end of the conduit, after which the locknuts shall be screwed tight. Conduit shall be joined by approved conduit couplings and shall have ends butted in all cases where couplings are used. Use three piece threaded electrical unions where standard couplings cannot be used. The use of running threads will not be permitted. Where condulets cannot be joined by standard thread couplings, approved type conduit unions shall be used. Connectors and couplings for electric metallic tubing shall be of the set screw type. Couplings for rigid heavy-wall conduit shall be of the threaded type.

E. Conduit fittings shall be Crouse-Hinds or Appleton grounding type, or approved equal.

F. Insulated bushings shall be provided for all conductors #4 and larger.

G. No wire shall be pulled in until the conduit system is complete and plastering dried. This does not include the white finish coat of plaster.

H. During Construction, all outlet boxes and conduit stub-ins shall be suitably protected against the entrance of foreign material.

2.3 BOXES AND FITTINGS

A. Boxes and fittings shall conform to requirements of Article 314 of the N.E.C.

B. Junction and pull boxes required by field conditions shall be installed whether indicated on drawings or not

C. The location of outlets not specifically dimensioned on the drawings should be considered as approximate only. The Contractor shall study the general plans with relation to the spaces surrounding each outlet in order that his work fit the work of others so that when fixtures or other fittings are installed, they will be symmetrically located according to design requirements.

D. Use only galvanized outlet and junction boxes, conduit fittings, covers, and supports for interior wiring and cast fittings and boxes with gasketed covers for exterior wiring. The Contractor shall provide all necessary structural supports for boxes and cabinets. Kindorf or Unistrut channels shall be used where applicable.

E. Boxes for concealed outlets shall be 4” square by 1-1/2” deep, or larger, with raised device covers as required, except that 2-3/4” deep switch boxes may be used where only one conduit enters a box.

F. Boxes for concealed ceiling outlets shall be 4” octagonal by 1-1/2” deep, or larger. Boxes in plaster ceilings shall have plaster covers. Fixture outlet boxes shall be equipped with fixture studs secured to the boxes.

G. Outlet boxes for exposed work shall be 4” square by 1-1/2” deep, or larger. Boxes shall have Appleton ½” deep surface metal covers to accommodate the devices indicated, or approved equal.

H. In walls or ceilings of concrete, tile or other non-combustible material, boxes and fittings shall be so installed that the front edge of the box or fitting will not set back of the finished surface more than ¼". In walls or ceilings constructed of wood or other combustible material, outlet boxes and fittings shall be set flush with the finished surface.

I. If a fixture, canopy or pan is used as an outlet box cover, any combustible wall or ceiling finish between the edge of the canopy and the outlet box shall be covered with non-combustible material.

J. Fixture studs shall be installed in all fixture outlets. In each case, the maximum permissible number of conductors shall be reduced by one.

K. Appropriate galvanized blank covers, subject to approval of the Architect, shall be installed over outlet or junction boxes which do not house a device. Multiple devices shall be installed in one-piece multi-gang box with one-piece multi-gang cover plates. On surface mounted switch and receptacle outlets, provide raised covers to permit mounting devices without additional device plates.

L. For junction and pull boxes, 14 gauge or thicker sheetmetal. Attach covers by means of ¼" X 20 round head machine screws. In damp locations, provide rubber or neoprene gaskets.

M. Attention is called to National Electrical Code, Article 314, Paragraph 314-16, Sub-paragraph (a) and (b) relative to allowable number of conductors in outlet boxes. Contractor shall make provisions to prevent overcrowding outlet and junction boxes regardless of number of conductors shown on the drawings at the outlets. There shall be no deviations from Code requirements on this subject.

2.4 CONDUCTORS

A. All conductors shall be copper and no wire shall be less than #12 AWG except as otherwise noted herein and or indicated on drawings.

B. All conductors, except as herein noted and/or as indicated on drawings, shall have 600 volt insulation type THHN/THWN. Wiring through channels of continuous surface or suspended fluorescent fixtures shall be Type RHH, or THHN.

C. Recessed fluorescent fixtures shall be fed with type THHN, or RHH conductors and recessed incandescent fixtures shall be fed with Type THHN conductors.

D. Conductors #8 and larger shall be stranded. Feeders shall be of the size and type indicated on drawings.

E. Conductors #8 and smaller shall be color coded. Conductors #6 and larger shall be marked with electrical tape color coded. Color schedule as follows:

	120/208	277/480
Phase A	black	brown
Phase B	red	purple
Phase C	blue	yellow
Neutral	white/grey	grey/white

Ground	green	green

2.5 GROUNDING

A. Grounding shall conform to the requirements of Article 250 of the N.E.C.

B. Contractor shall provide grounding system indicated on drawings.

C. The steel conduit systems and the neutral conductors of the wiring systems shall be grounded at the service equipment. The copper service ground conductors shall be extended in conduit from the services to as near as practicable to the point of entrance of the water service. Where the conduit routing is via finished areas, it shall be run concealed. Ground connection shall be visible, and connection of conduit and conductors to the water pipe shall be made with an approved ground connector, conduit hub, and water pipe clamp.

D. A grounding conductor shall be provided in all conduit. The grounding conductor shall be green insulated, with a minimum size of #12 AWG, or as indicated on the drawings or per NEC-250. Grounding conductors routed entirely in soil as part of the ground loop shall be bare copper. The grounding conductor connecting the electrical service to the ground system shall be green insulated copper.

E. The above requirements shall be supplemented by ground to ¾" diameter, 10'-0" long driven copper bonded ground rods as shown on the drawings.

F. Bond jumpers shall be used around concentric or eccentric knockouts on service equipment.

G. Grounding pole of each polarized receptacle shall be bonded to its outlet box with copper wire and machine or self-tapping screw.

2.6 EQUIPMENT SUPPORTS

All electrical switches, panels, appurtenances, etc., shall be rigidly supported on Unistrut, Kindorf or equal steel framing which shall be securely fastened to walls, floors, ceilings, etc., as required. Details of framing must be submitted to Architect for approval before installation.

2.7 WIRING DEVICES

A. Devices shall be Specification Grade as manufactured by Leviton, Hubbell, P & S, or approved equal. Provide 25 additional receptacles complete with branch circuit homerun as directed by Architect.

B. All devices listed below may not necessarily be used.

C. Comparative catalog numbers of devices shall conform to the following: (All devices listed may not be used).

1. Duplex receptacle, 20A, 125V, NEMA 5-20

Hubbell CR5362
Leviton 5362
P & S 5362

2. Duplex receptacle, GFI, 20A, 125V, NEMA 5-20
   Hubbell GF5362
   Leviton 6899
   P & S 2091

3. Toggle switch, 20A, 120-277V, SPST
   Hubbel CS1221
   Leviton 1221-2
   P & S 20AC1

4. Duplex Weatherproof – GFI with WP cover.

D. All receptacles shall be mounted with the grounding connection at the top.

2.8 DEVICE PLATES

A. Wall plates shall be of the one-piece type, .100" smooth nylon - white. Plates shall be of the same manufacturer as devices furnished. All plates shall be JUMBO size.

B. Use Multi-gang plates where switches are grouped.

C. Plates shall be installed with all four edges in continuous contact with finished wall surfaces without the use of mats or similar devices. Plaster fillings will NOT be permitted. Plates shall be installed with an alignment tolerance of 1/16" from the vertical or horizontal. Plates for devices fed with exposed conduit shall be as hereinbefore specified.

D. Device plates shall not be installed until painting is completed. Device plates having paint on their surfaces, or having their finish marred by use of paint remover, shall be replaced at no additional cost to the Owner.

E. Where device is located outdoors or specified as weatherproof, use cast aluminum box with cast aluminum cover listed for wet location when cover is closed (NEC 410-57(b) exception)

2.9 MOUNTING HEIGHTS

A. If not otherwise indicated in Architectural or Electrical drawings, mounting heights to centerline of outlets shall be as follows:

B. Receptacles - 18” above finished floor except above counter where indicated, or as directed by Owner.

C. Light Switches - 48” above finished floor.

D. Panelboard - Not more than 6’-0” from topmost operating handle to floor.

E. Bracket Fixtures - 8'-0" above floor, or where mounted above exterior door, mirror, medicine cabinet, at a height just sufficient to clear the swing of the door or medicine cabinet.

F. The above mounting heights may be adjusted as required to permit bottom or top of plate to align with mortar joints in unfinished masonry walls, provided joints are not raked. Where joints are raked, adjust height as required to insure that center of outlet box will be in center of a masonry unit.

2.10 PANELBOARDS

A. Panelboards shall be constructed with copper or silver plated copper bus bars. Panelboard shall be fully rated with a minimum rating for each panelboard as indicated on panel schedules on the drawings. All exterior panelboards shall be NEMA-3R with lockable covers.

B. See drawings for panelboard schedules. Provide 200% neutral bus where indicated. All panels shall have ground bus. Provide contactors where indicated on schedule.

C. Panelboards shall be mounted in suitable electro-galvanized or sherardized, code-gauge, dead front, steel boxes with trim arranged for flush or surface mounting as indicated on drawings. Sufficient space shall be provided for not less than 4" gutters on the sides, top and bottom of panels. The doors shall be fitted with not less than two welded and riveted hinges, fitted with non-removal pins and provided with latches and locks with three (3) keys. Door and trim shall be properly matched and fitted closely by means of welded rebates on the sides of the trim and shall be finished to match surrounding walls or as otherwise directed by the Architect. Directory frame with typewritten directory of circuits under transparent cover shall be provided inside of door.

D. Panelboards shall be so located that its rating will not be reduced by heat from external sources.

E. Circuit breakers shall be bolted to the bus bar, and be quick-make, quick-break, using over-center toggle mechanism. Breakers shall indicate tripped position by assuming the center toggle position. Breakers shall have deion arc extinguisher principle. All two and three-pole breakers shall have single handle and the common trip. No bail handle ties will be acceptable. Where noted on the drawings and for equipment under kitchen hood and elevator feeders, shunt trip type circuit breakers shall be provided with control wiring run to activation source. Install a bolt-on, listed combination type arc-fault circuit interrupter (AFCI) where shown on the drawings. The AFCI shall be installed on 120-volt, single phase, 20-ampere branch circuits to provide protection to the branch circuit supplying outlets installed in dwelling unit bedrooms per NEC 2005. The AFCI shall have two indicating lights, for Arc Fault and Ground. The breaker shall keep, in non-volatile memory, the last trip for up to 30 days. The memory shall be able to be reset. The breaker shall have a Test button.

F. Panelboards shall be as shown in panelboard schedule and shall be manufactured by Square D (NQ series 240V, NF series 480V), Siemens P series or equal.

G. Provide factory TVSS with 100 kA surge capacity.

2.11 SAFETY SWITCHES

A. Safety switches shall be of the visible blade, heavy duty knife switch type. They shall be of the fused or unfused type as required. Fused switches shall have positive pressure fuse clips. Switches shall be fully interlocked with provision to neutralize the interlock by a screwdriver while under load without interrupting the circuit. Switches shall be complete with insulated base and pressure or solderless lugs. All switches shall be horsepower rated, capable of breaking stalled-rotor motor current at these ratings. Outdoor locations shall have NEMA Type 3R enclosures, indoor locations shall have NEMA 1 enclosures.

B. Switches shall have provision for padlocking in the “ON” or “OFF” positions. Safety switches, as indicated on plans, shall be Square D - F series, Siemens H series or equal.

2.12 FUSES

Fuses utilized shall provide type 2 “no damage” as defined by IEC 947. All fuses shall have a minimum interrupting rating of 200,000 A. Fuses protecting transformers shall be Class J or RK5 time delay. Fuses protecting motor loads shall be Class J or RK1 current limiting. Provide one set of spare fuses for each load protected. Fuses shall be manufactured by Ferraz-Shawmut, Cooper Bussman, or approved equal.

2.13 TRANSFORMERS

Transformers shall be low loss type with minimum efficiency per NEMA TP-1. Transformers shall be three phase with 480 volt primaries and 208V/120 volts secondaries. Transformers shall be indoor, floor mounted, dry type with 2 – 2-1/2” FCAN and FCBN taps. Transformers shall be designed for 150 degrees C. temperature rise, UL approved, and shall meet ASA-NEMA sound level standards for the KVA size indicated on the drawings. Transformers shall be provided with a normal K factor, unless noted otherwise on the drawings. Provide 4 inch housekeeping concrete pad under each transformer. Transformers shall be as manufactured by Square D – EE series, Siemens 3F3Y, or equal.

2.14 TERMINATIONS

All termination lugs shall be rated 75 degrees C or higher, and shall be compatible with number and size of wires to be terminated.

END OF SECTION 260600

SECTION 262000 - ELECTRICAL SERVICE

PART 1 - GENERAL

1.1 GENERAL REQUIREMENTS

A. Applicable items of all other ELECTRICAL SECTIONS shall apply to this Section.

B. All arrangements and installations of services shall comply with requirements of DEMCO and the N.E.C.

PART 2 - EXECUTION

2.1 TEMPORARY POWER AND LIGHTING

A. The Contractor shall make all necessary arrangements for furnishing a temporary power supply with service as required by the General Contractor and various Sub-contractors employed in connection with the work to be performed on the job site. The Contractor shall cooperate with other Sub-contractors to insure that adequate power and lighting service is available at all times during the progress of the work.

B. The Contractor shall include in his price all fees, assessments and permit costs for the new electrical service.

2.2 NEW SERVICE

A. Coordinate with DEMCO to utilize existing transformer for new power service.

END OF SECTION 262000

SECTION 270500 - TELECOMMUNICATION SYSTEMS

PART 1: GENERAL

1.1 SUMMARY

A. This Section includes general requirements specifically applicable to the Ascension Parish School Board voice and data Infrastructure - Division 270500.

1. This Section Includes: Equipment, materials, labor, and services to provide telephone and data distribution system including, but not limited to:

   a. Raceway, boxes, and cable tray

   b. Telephone and data cabling terminations

   c. Optical fiber and terminations

   d. Telecommunications outlets

   e. Terminal blocks/cross-connect systems

   f. Equipment racks and cabinets

   g. System testing

   h. Documentation and submissions

   i. Removal of abandoned cable

B. Work Specifically Excluded from Project:

1. Incoming common carrier services.
2. Private Branch Exchange Systems.
3. Wide Area Network Systems.
4. Materials provided by the owner as identified in the Contract Documents.

C. The Cabling Contractor shall be responsible for:

1. Providing all additional materials, and the necessary labor and services required to ensure all components of the system are completely installed in accordance with the intent of the Contract Documents.
2. Furnishing and installing all incidental items not actually shown or specified, but which are required by good practice to provide complete functional systems.
3. Coordinating the details of facility equipment and construction for all specification divisions that affect the work covered under this Division.
4. Coordinating all activities with the overall construction schedule.

5. Developing bill of materials, performing material management and efficiently using the materials whether they are issued by the General Contractor, the owner or purchased by the Cabling Contractor.
6. Ensure materials in excess of those required to complete the project are kept in their original condition and packaging for restocking.
7. Furnish and install firewall penetrations where applicable.

D. Intent of Drawings**:**

1. Communications plan drawings show only general locations of equipment, devices, raceways, cable trays, boxes, etc. All dimensioned locations and elevations are approximate. The Cabling Contractor is responsible for the field coordination of communications work with the other trades prior to beginning work.
2. The Cabling Contractor shall be responsible for the proper placement and routing of equipment, cable, raceways, cable tray, and related components; according to the Contract Documents and subject to prior review by the General Contractor.
3. Refer all conflicts between Contract Documents to Contractor for resolution.

1.2 REFERENCES

A. Design, manufacture, test, and install telecommunications cabling networks per manufacturer's requirements and in accordance with NFPA-70 (2005 edition of the National Electrical Code®), IEEE C2 2007(NESC 2007), state codes, local codes, requirements of authorities having jurisdiction, and particularly the following standards:

1. ANSI/NECA/BICSI-568-2006 -- Standard for Installing Commercial Building Telecommunications Cabling ANSI/TIA/EIA Standards
2. ANSI/TIA/EIA-568-B.1 -- Commercial Building Telecommunications Cabling Standard, Part 1: General Requirements
3. ANSI/TIA/EIA-568-B.2 -- Commercial Building Telecommunications Cabling Standard, Part 2: Balanced Twisted Pair Cabling Components
4. ANSI/TIA/EIA-568-B.3 -- Optical Fiber Cabling Components Standard
5. ANSI/TIA/EIA-569-B -- Commercial Building Standard for Telecommunications Pathways and Spaces
6. ANSI/TIA/EIA-606 (A) -- The Administration Standard for the Telecommunications Infrastructure of Commercial Buildings
7. ANSI-J-STD-607 (A) -- Commercial Building Grounding and Bonding Requirements for Telecommunications
8. TIA-526-7 –OFSTP-7 -- Measurement of Optical Power Loss of Installed Single-Mode Fiber Cable Plant

9. TIA-526-14A –OFSTP-14 -- Optical Power Loss Measurements of Installed Multimode Fiber Cable Plant

10. ANSI/TIA/EIA-758 (A) -- Customer-Owned Outside Plant Telecommunications Cabling Standard

11. TIA TSB-140 -- Additional Guidelines for Field Testing Length, Loss And Polarity of Optical Fiber Cabling Systems

B. Install cabling in accordance with the most recent edition of BICSI® publications:

1. BICSI® -- Telecommunications Distribution Methods Manual

2. BICSI® -- Installation Transport Systems Information Manual

3. BICSI® -- Network Design Reference Design Manual

4. BICSI® -- Outside Plant Design Reference Manual

5. BICSI® -- Wireless Design Reference Manual

6. BICSI® -- Electronic Safety and Security Design Reference Manual

7. Infocomm/BICSI – AV Design Reference Manual

C. Federal, state, and local codes, rules, regulations, and ordinances governing the work, are as fully part of the specifications as if herein repeated or hereto attached. If the Cabling Contractor should note items in the drawings or the specifications, construction of which would be code violations, promptly call them to the attention of the owner's representative in writing. Where the requirements of other sections of the specifications are more stringent than applicable codes, rules, regulations, and ordinances, the specifications shall apply.

1.3 DEFINITIONS

A. **Active Equipment**: Electronic equipment used to develop various WAN and LAN services.

B. **Backbone**: A cable or conductors and its pathway between any of the following: telecommunications rooms, telecommunications enclosures, common telecommunications rooms, floor-serving terminals, entrance facilities, equipment rooms, and common equipment rooms.

C. **Bonding**: Permanent joining of metallic parts to form an electrically conductive path which will assure electrical continuity and the capacity to conduct safely any current likely to be imposed on it.

D. **Building Equipment Room (BER)**: Room in each building used to distribute communications services to Telecommunications Rooms (TR) in the same

building. Typically, the BER contains passive equipment used for electrical protection (protectors) and building cross-connect, and active network equipment used for LANs. The BER may also serve the function of a TR.

E. **Cabinet**: Freestanding, floor-mounted, modular enclosure designed to house and protects rack-mounted electronic equipment.

F. **Cable Tray**: Vertical or horizontal open supports usually made of aluminum or steel that is fastened to a building ceiling or wall. Cables are laid in and fastened to the trays. A cable tray is not a raceway.

G. **Campus**: Grounds and buildings of a multi-building premises environment.

H. **Channel**: The end-to-end transmission path between two points at which application specific equipment is connected; may include one or more links, cross-connect jumper and/or patch cords, and work area station cords. Does not include connection to active equipment.

I. **Communications Equipment Room** –See Telecommunications Room (TR)

J. **Cross-Connect**: Equipment used to terminate and tie together communications circuits.

K. **Cross-Connect Jumper**: A cluster of twisted-pair conductors without connectors used to establish a circuit by linking two cross-connect termination points.

L. **Fiber Optic Distribution Unit (FDU)**: Cabinet with terminating equipment used to develop fiber optic cross-connect facilities.

M. **Grounding**: A conducting connection to earth, or to some conducting body that serves in place of earth.

N. **Hinged Cover Enclosure**: Wall-mounted box with a hinged cover that is used to house and protect electrical devices.

O. **Horizontal**: Pathway facilities and media connecting Telecommunications Rooms (TR) to Telecommunications Outlets (TO).

P. **Jack**: Receptacle used in conjunction with a plug to make electrical contact between communications circuits, e.g., eight-position/eight-contact modular jacks.

Q. **Link**: A transmission path between two points, not including terminal equipment, work area cables, and equipment cables; one continuous section of conductors or fiber, including the connecting hardware at each end.

R. **Local Area Network (LAN)**: Data transmission facility connecting a number of communicating devices, e.g., serial data, Ethernet, token ring, etc. Typically, the network is limited to a single site.

S. **Main Equipment Room (MER)**: The room used to distribute communication services to all Building Equipment Rooms (BER's) on the premises, and to interconnect premises services with the telephone companies. Typically, the MER contains passive equipment used for electrical protection (protectors) and main campus cross-connect, and active equipment used for PBX, WAN, and LAN.

T. **Media**: Twisted-pair, coaxial, and fiber optic cable or cables used to provide signal transmission paths.

U. **Mounting Frame**: Rectangular steel framework which can be a free standing equipment rack or wall mounted rack to support wiring blocks, patch panels, and other communications equipment.

V. **Passive Equipment**: Non-electronic hardware and apparatus, e.g., equipment racks, cable trays, electrical protection, wiring blocks, fiber optic termination hardware, etc.

W. **Patch Cords**: A length of wire or fiber cable with connectors on one or both ends used to join communications circuits at a cross-connect.

X. **Patch Panel**: System of terminal blocks or connectors used with patch cords that facilitate administration of cross-connect fields.

Y. **Pathway**: Facility for the placement of communications cable. A pathway facility can be composed of several components including conduit, wireway, cable tray, surface raceway, underfloor systems, raised floor, ceiling support wires, etc.

Z. **Private Branch Exchange (PBX)**: Private communications switching system located on the user's premises. A PBX switches voice and data calls within a building or premises and between the premises and facilities provided by public common carrier networks.

AA. **Protectors**: Electrical protection devices used to limit foreign voltages on metallic communications circuits.

BB. **Raceway**: An enclosed channel designed expressly for holding wires or cables; may be of metal or insulating material. The term includes conduit, tubing, wireway, underfloor raceway, and surface raceway; does not include cable tray.

CC. **Racks**: An open, freestanding, floor-mounted structure, typically made of aluminum or steel, used to mount equipment; usually referred to as an equipment rack.

DD. **Rack Unit (RU)**: A unit of measure of vertical space in an equipment rack. One rack unit is equal to 45 mm (1.75 in).

EE. **Telecommunication Outlet (TO)**: Connecting device mounted in a work area used to terminate horizontal cable and interconnect cabling with station equipment.

FF. **Telecommunications Room (TR)**: Distributes communications services to users within a serving zone and interconnects with the BER. Typically, the TER contains passive equipment used for cross-connect and active network equipment used for LANs. TR is sometimes referred to as the communications equipment room.

GG. **Wide Area Network (WAN)**: A data communications system that uses telecommunications circuits to link LAN's that are distributed over large geographic distances.

HH. **Wiring Block**: Punch down terminating equipment used to develop twisted-pair cross-connect facilities.

1.4 SYSTEM DESCRIPTION

A. The owner will implement a comprehensive integrated communications distribution system, as described in paragraph B below, to provide wiring infrastructure which may be used to support one or more of the following services and systems:

1. Data and Voice Telecommunications.
2. Wireless systems.
3. Facilities management systems.

B. The communications distribution system consists of the following major subsystems, as specified elsewhere:

1. Interbuilding Backbone: The interbuilding subsystem refers to all twisted-pair and fiber optic backbone communications cabling connecting the Main Equipment Room (MER) to each building equipment room (BER) in all buildings on the campus. Note: typically outside plant cables.
2. Intrabuilding Backbone: The intrabuilding subsystem refers to all twisted-pair and fiber optic backbone communications cabling connecting the Building Equipment Room (BER) to each Telecommunication Room (TR) in the buildings.
3. Communication Rooms: The communications room contains the distribution subsystem comprised of the passive components used to terminate cabling subsystems and distribute communications services. This subsystem includes installations in the Main Equipment Room (MER), Building Equipment Rooms (BERs), Telecommunications Rooms (TRs) and Telecommunications Enclosures (TEs).

4. Horizontal Distribution: The horizontal distribution subsystem refers to all intra-building twisted-pair and fiber optic communications cabling connecting telecommunication rooms (TRs) to telecommunication outlets (TOs) located at individual work areas.
5. Work Area Distribution Subsystem: Patch cords, adapters, and devices located between the TO and station equipment.

C. The communications distribution system is based on a combination of the following communications transmission technologies:

1. 4-pair unshielded twisted-pair cable (Cat 6)
2. multi-pair unshielded twisted-pair cable (Cat 3)
3. 8.3/125-micron singlemode fiber optic cable
4. 8-position telecommunications jacks
5. 8-position telecommunications patch panels
6. Insulation displacement connector (IDC) type field terminated wiring blocks
7. Factory Terminated copper patch cords
8. Rack mount fiber optic hardware
9. Wall mounted fiber optic hardware
10. Fiber optic connectors.
11. Factory terminated fiber optic patch cords

D. The work locations and limits of work are shown on the drawings.

1.5 SUBMITTALS

A. General:

1. Provide ongoing inspection and permit certificates and certificates of final inspection and acceptance from the authority having jurisdiction.
2. Manufacturer's standardized schematic diagrams and catalog cuts shall not be acceptable unless applicable portions of it are clearly indicated and non-applicable portions clearly deleted or crossed out.
3. When the specifications include product descriptions, model numbers, part numbers, etc. that have been superseded, changed, or discontinued, the Contractor shall submit a comparable substitution prior to the bid process for review by The Livingston Parish School Board Telecommunications.
4. The contractor shall be a Panduit's Certified Installer (PCI), and hold current certificate stating that the Cabling Contractor is in good standing in the Panduit PCI program.
5. Contractor shall provide a minimum 2 yr manufacturer warranty on all cabling and connectivity.

B. Provide all applicable portions of the following information with the Bid:

1. Documentation establishing qualifications to perform installation functions as required in 1.5.
2. Statement demonstrating an understanding of project scope and schedule which includes the following information:
   a. Where (city, office) the project will be staffed.
   b. Project organizational chart with team member names; e.g., project manager, principal skilled technicians, and contractors.

C. Provide all applicable portions of the following information within 10 days after award of Subcontract:

1. Project schedule in hard copy. Include, at a minimum, major tasks, milestones, dependencies, staffing, and durations for each task.
2. Contractor shall then work with the General Contractor to merge this schedule into the overall construction schedule.
3. Provide the following information for materials, components, and equipment to be furnished by the Contractor:
   a. Descriptive literature, manufacturer's specification data sheets, and manuals.
   b. Individual price and delivery schedules.
   c. Manufacturer's product test data with indicator arrows.
   d. Final Performance testing criteria and data for communications distribution system cabling systems.

1.6 QUALITY ASSURANCE

A. The following manufacturers listed have been approved for use in APSB construction and should be considered the minimum standard of quality. Approval of equivalents must be obtained prior to the Cabling Contractor submitting a proposal. A representative of APSB will determine approvals of equivalents.

1. Multi-pair cable
   a. General Cable
2. Station Voice and Data Cable
   a. General Cable
3. Copper Termination Products
   a. Panduit – Jacks and Patch Panels
4. Fiber Optic Cabling
   a. Corning Cabling Systems
5. Wall Mount Racks

a. Hubbell Premise Wiring

b. Great Lakes Case and Cabinet

B. When requesting substitutions, it is the responsibility of the contractor to submit alternate specification showing comparability to the parts listed.

C. The contractor should be a Panduit Certified Installer (PCI)

D. The contractor shall have worked satisfactorily for a minimum of five (5) years on systems of this type and size.

E. The contractor will be certified to install and terminate both copper and fiber.

F. Upon request by the owner, engineer or designer; furnish a list of references with specific information regarding type of project and involvement in providing of equipment and systems.

G. Equipment and materials of the type for which there are independent standard testing requirements, listings, and labels, shall be listed and labeled by the independent testing laboratory.

H. Where equipment and materials have industry certification, labels, or standards (i.e., NEMA - National Electrical Manufacturers Association), this equipment shall be labeled as certified or complying with standards.

I. Material and equipment shall be new, and conform to grade, quality, and standards specified. Equipment and materials of the same type shall be a product of the same manufacturer throughout.

J. Subcontractors shall assume all rights and obligations toward the contractor that the contractor assumes toward the owner and engineer/designer.

K. All work and equipment shall conform to the appropriate portions of the specifications, codes and regulations as listed in Section 1.3.

1.7 DELIVERY, STORAGE AND HANDLING

A. The Cabling Contractor shall protect equipment during transit, storage, and handling to prevent damage, theft, soiling, and misalignment. Coordinate with the owner for secure storage of equipment and materials. Do not store equipment where conditions fall outside manufacturer's recommendations for environmental conditions. Do not install damaged equipment; remove from site and replace damaged equipment with new equipment.

PART 2 PRODUCTS

2.1 MANUFACTURERS

A. The products of manufacturers named in individual articles below are considered the minimum standard of quality unless prior approval has been obtained

1. Provide products of manufacturers as named in individual articles

2. Where no manufacturer is specified, provide products of manufacturers in compliance with requirements.

B. FABRICATION

1. Fabricate custom-made equipment with careful consideration given to aesthetic, technical, and functional aspects of equipment and its installation.

C. SUITABILITY

1. Provide products that are suitable for intended use, including, but not limited to environmental, regulatory, and electrical.

2.2 INSIDE TELEPHONE FEEDER CABLE

A. Inside telephone feeder cable shall be multi-pair telephone cable designed for inside wiring. The cable shall have the following characteristics:

1. Conductors shall be solid, 24 gauge, annealed copper. Strands shall be individually insulated, polyethylene insulated cable, and twisted into pairs.

2. Number of pairs in cable shall be noted for each job.

3. Individual conductors shall be color-coded.

4. The cable shall have an overall jacket/sheath rated, per NEC code, for use in a plenum space , “CMP” rated.

5. Cables shall be one of the following products or prior approved equal:

a. General Cable

Part designation 752785 (25 pair cable)
Part designation 752793 (50 pair cable)
Part designation 752819 (100 pair cable)
(Available in a 25-pair cable to a 300-pair cable)

2.3 DATA STATION CABLING

A. Data station cables shall be Category 6 compliant with ANSI/TIA/EIA-568-C.2-1, 100 ohms, four-pair, 24 gauge copper, plenum or riser-rated where specified, unshielded twisted pair cables. The outer jacket of the cable shall be **BLUE** in color. Cable shall be one of the following products or a prior approved equal:

1. General Cable part numbers:

   a. Genspeed 6 CMR – 7133840

   b. Genspeed 6 CMP – 7131840

2.4 WIRELESS ACCESS POINT CABLING

A. Wireless Access cables shall be Category 6 compliant with ANSI/TIA/EIA-568-C.2-1, 100 ohms, four-pair, 24 gauge copper, plenum or riser-rated where specified, unshielded twisted pair cables. The outer jacket of the cable shall be **BLUE** in color. Cable shall be one of the following products or a prior approved equal:

1. General Cable part numbers:

   a. Genspeed 6 CMR – 7133840

   b. Genspeed 6 CMP – 7131840

2.5 IP VIDEO CABLING

A. CCTV cables shall be Category 6 compliant with ANSI/TIA/EIA-568-C.2-1, 100 ohms, four-pair, 24 gauge copper, plenum or riser-rated where specified, unshielded twisted pair cables. The outer jacket of the cable shall be **GREEN** in color. Cable shall be one of the following products or a prior approved equal:

1. General Cable part numbers:

   a. Genspeed 6 CMR – 7133846

   b. Genspeed 6 CMP – 7131846

2.6 IP INTERCOM SYSTEM CABLING (IF SPECIFIED)

A. IP Intercom System cables shall be Category 6 compliant with ANSI/TIA/EIA-568-C.2-1, 100 ohms, four-pair, 24 gauge copper, plenum or riser-rated where specified, unshielded twisted pair cables. The outer jacket of the cable shall be **GRAY** in color. Cable shall be one of the following products or a prior approved equal:

1. General Cable part numbers:

   a. Genspeed 6 CMR – 7133843

   b. Genspeed 6 CMP – 7131843

2.7 PATCH PANELS/PATCH CORDS

A. All data station cabling and wireless access point cabling shall terminate on rack mounted 24-port or 48-port patch panels. Panels shall be 19" rack mounted and capable of accepting a variety of snap in inserts such as RJ-45 Category 6 modules for UTP, Fiber Optic inserts and Audio/Video inserts.

B. Panduit Patch Panel part number or prior approved equal

a. 24-port - CPPL24WBLY

b. 48-port - CPPL48WBLY

1) NOTE: Snap-in modules for Voice and Data shall be color coded to match the corresponding WAO. See Section 2.8 for WAO colors.

C. Panduit Patch Cord Part number or approved equal

a. UTPSP7BUY (7ft)

b. UTPSP14BUY (14ft)

2.8 WORK AREA OUTLETS (WAO)

A. WAO shall consist of a single gang 2 Port or 4 Port face plate with either two (2), or four (4) Category 6 RJ-45 data jacks at each location wired T568B.

B. Data jack shall match the color of the faceplate with color coded icons.

C. Both wall and raceway-mounted WAO shall be mounted in single gang utility boxes.

D. Labeling of all WAO's is required.

E. WAO jacks shall be a Category 6, 8-pin 8-Conductor modular jack, wired T568B and shall be from the same manufacturer as the face plates.

1. Panduit part number:

a. CJ688TPEI (Electric Ivory)

F. WAO faceplates shall be capable of accepting a variety of snap in inserts such as RJ-45 Mini-Com modules for UTP, Fiber Optic inserts and Audio/Video inserts. Face plates must be from the same manufacturer as the jacks.

1. Panduit part number or prior approved equal:

a. Two Port - CFPE2EIY

b. Four Port - CFPE4EIY

2.9 WIRELESS ACCESS POINT (WAP) CABLING

A. WAP shall be terminated at the patch panel with a Panduit Cat6 Electric Ivory data jack, and wired T568B.

1. Panduit Part numbers:

a. Cat6 Electric Ivory Jack – CJ688TPEI

B. WAP shall be terminated at the device end with a Panduit Cat6 Electric Ivory data jack, and wired T568B. Cat6 jack shall be mounted within a 2 Port surface biscuit and placed above ceiling with 10ft service loop. Surface box shall be labeled in accordance with section 3.8.

1. Panduit Part numbers:

a. Cat6A Ivory Jack – CJ6X88TPEI

b. 2 Port Surface Box – CBX2EI-X

2.10 FIBER OPTIC CABLING

A. Singlemode Fiber, 9/125µm core, OS2 Indoor/Outdoor, OFNR Riser Rated, all dielectric construction, UV resistant, jacketing suitable for installation in aerial, duct or riser applications. Must be a gel-free construction utilizing a water-swellable yarn. Individual fiber strands shall be color coded per telecommunications industry practice.

1. Transmission Performance Characteristics as follows

Wavelength	1310nm	1550 nm
Maximum attenuation (db/km)	1.0	.75
Serial Gigabit Ethernet Distance (m)	5000	-
Serial 10 Gigabit Ethernet Distance (m)	10000	40000

2. Corning Cabling Systems Part Numbers or prior approved equal:

a. OFNR

xxxESF-T4101D20

b. xxx Denotes strand count

2.11 FIBER OPTIC CONNECTORS

A. Fiber optic connectors shall be Corning Unicam, Singlemode, OS2 LC style.

1. Corning Part Number:

a. 95-200-99

B. Fiber optic connectors shall meet or exceed the performance specifications in ANSI/TIA/EIA-568-C.3

2.12 FIBER OPTIC DISTRIBUTION UNITS

A. Fiber Distribution Units (FDU) shall be 19” rack mountable, 72-ports, with cable strain relief, grounding lugs, slack storage and front and rear access doors.

B. The FDU at the Intermediate Cross-Connect (IC) shall include the bulkhead panel and blanks for the unused panel ports. The FDU at the Main Cross-Connect (MC) shall have the appropriate number of bulkheads to accommodate the FDU’s at the IC and blanks for the unused panel ports. The bulkhead panels shall be loaded with Singlemode, **LC Duplex** couplers with phosphor bronze split sleeves.

C. The FDU shall be sized to accommodate the appropriate number of fiber connections.

D. Fiber distribution panels shall be labeled with each strand marked permanently with the corresponding Transmit and Receive appropriately marked.

E. Bulkheads panels must be from the same manufacturer as the FDU.

F. Corning part number or prior approved equal:

1. FDU – CCH-01U

2. FDU bulkheads – CCH-CP12-A9

2.13 FREE STANDING EQUIPMENT RACKS

A. 45 RMU, 7 feet high, 19 inches wide, 3 inch channel depth, EIA free-standing rack, 1000 lb capacity, UL listed, black finish

B. Furnish and install Panduit Tack-Tape, Velcro or approved equal cable wraps for wire management. **Plastic, nylon or metal tie wraps are not allowed**.

2.14 CABINETS

A. Wall mounted cabinets will be used in classrooms.

B. Wall mounted cabinets will be 19" rack mountable, 2 pair of 12-24 EIA/TIA tapped rails, swing out, 32” high. Cabinets shall be suitable for front mounting of patch panels and/or owner furnished switches.

C. Hubbell part number RE4B or prior approved equal:

D. Furnish and install Panduit Tack-Tape, Velcro or approved equal cable wraps for wire management. **Plastic, nylon or metal tie wraps are not allowed**.

E. Cabinets should be installed on the wall with a rigidly fixed ¾" trade size, A-C grade plywood, preferably free of voids and capable of supporting attached equipment. Plywood should be either fire rated and/or covered with two coats of fire retardant paint.

2.15 CONDUIT AND RACEWAY

A. Indoor:

1. Inner-duct is required for indoor installations of fiber.

2. Raceway shall be Panduit raceway system and will include all elbows, T's, boots, and connectors needed.

3. Installation must include a trace wire to be installed in the Inner-duct.

B. Outdoor:

1. PVC or Inner-duct, shall be a non-metallic, flexible conduit intended for power and communications applications. Duct shall be suitable for underground installations.

   a. Installation must include a trace wire to be installed in the conduit.

2.16 POWER STRIPS

A. For mounting in the rack, with 20-A, 120V AC, 1U

1) 10 Outlet NEMA 5-20

2) 12ft Power Cable.

3) Color Black

4) APC Part Number: AP9563 or approved equal.

2.17 PROJECTOR MOUNTING COMPONENTS

A. Each temporary classroom shall be provided with the following components for the owner supplied projector and electronic board:

1. Chief Manufacturing – CMA440 mounting kit

2. Chief Manufacturing – CMS-009 or CMS-024 mounting pipe

3. Chief Manufacturing – RPA-U universal projector mount

4. Hubbell – IMF1TI faceplate, IMB1TI blank plate, IMBDS1TI VGA plate with 15M6P10 8 pin to male VGA, VGA650BK 50' VGA 8 pin cable and 15T6P10 8 pin to female VGA cable. This assembly shall be setup to wire the projector to the electronic board.

5. Panduit – JBP1DIW deep wall box and LDPH10IW8-A 8' raceway

PART 3 EXECUTION

3.1 PRE-INSTALLATION SITE SURVEY

A. Prior to start of systems installation, meet at the project site with the owner's representative and representatives of trades performing related work to coordinate efforts. Review areas of potential interference and resolve conflicts before proceeding with the work. Facilitation with the General Contractor will be necessary to plan the crucial scheduled completions of the equipment room and telecommunications closets.

B. Examine areas and conditions under which the system is to be installed. Do not proceed with the work until satisfactory conditions have been achieved

3.2 EXAMINATION

A. The Cabling Contractor must request an inspection by the owner’s representative (Network Administrator) prior to completion. Agreed upon punch list items must be completed and re-inspected by the owner’s representative for final approval.

3.3 HANDLING AND PROTECTION OF EQUIPMENT AND MATERIALS

A. The Cabling Contractor is responsible for the safekeeping of your own and your subcontractors' property, such as equipment and materials, on the job site. The owner assumes no responsibility for protection of above named property against fire, theft, and environmental conditions.

3.4 PROTECTION OF OWNER'S FACILITIES

A. Effectively protect the owner's facilities, equipment, and materials from dust, dirt, and damage during construction.

B. Remove protection at completion of the work.

3.5 FIELD QUALITY CONTROL

A. The Cabling Contractor shall be experienced in the design, fabrication, and installation of communications premise distribution systems of similar size and scope to this project. Installation technicians shall be manufacturer certified. Installer must be a PCI (Panduit Certified Installer) in good standing in the Panduit PCI program.

B. The Communications Contractor must have installation and service facilities within a 200-mile radius of the project site. All qualifications, including the firm's facilities shall be available for inspection by any school board official.

3.6 INSTALLATION

A. Receive, check, unload, handle, store, and adequately protect equipment and materials to be installed as part of the contract. Store in areas as directed by the owner's representative. Include delivery, unloading, setting in place, fastening to walls, floors, ceilings, or other structures where required, interconnecting wiring of system components, equipment alignment and adjustment, and other related work whether or not expressly defined herein.

B. Install materials and equipment in accordance with applicable standards, codes, requirements, and recommendations of national, state, and local authorities having jurisdiction, and National Electrical Code® (NEC) 2005 and with manufacturer's printed instructions.

C. Adhere to manufacturer's published specifications for pulling tension, minimum bend radii, and sidewall pressure when installing cables.

1. Where manufacturer does not provide bending radii information, minimum-bending radius shall be 15 times cable diameter. Arrange and mount equipment and materials in a manner acceptable to the engineer and the owner.

D. Penetrations through floor and fire-rated walls shall utilize intermediate metallic conduit (IMC) or galvanized rigid conduit (GRC) sleeves and shall be firestopped after installation and testing, utilizing a firestopping assembly approved for that application.

E. Install station cabling to the nearest telecommunications room (TR), unless otherwise noted.

F. Installation shall conform to the following basic guidelines:

1. Use of approved wire, cable, and wiring devices

2. Neat and uncluttered wire termination

G. Attach cables to permanent structure with suitable attachments at intervals of 48 to 60 inches. Support cables installed above removable ceilings

H. Install adequate support structures for 10 foot of service slack at each TR.

I. Support riser cables every three (3) floors and at top of run with cable grips.

J. Limit number of four-pair data riser cables per grip to fifty (50)

K. Install cables in one continuous piece. Splices shall not be allowed except as indicated on the drawings or noted below:

1. Provide overvoltage protection on both ends of cabling exposed to lightning or accidental contact with power conductors.

L. Voice and Data cables shall be routed above the ceilings with cables neatly bundled with Panduit Tack-Tape, Velcro or approved equal cable wraps for wire management.

1. **Plastic, nylon or metal tie wraps are not allowed**.

2. No more that 24 cables shall be bundled together in ceiling.

3. Cable ties must not distort the outer jacket of the cable

4. Cables suspended above the ceiling shall not rest on ceiling tiles or lighting fixtures.

M. All strands of Fiber Optic Cabling shall be terminated

1. Terminate using LC type connectors except where legacy enclosures or equipment require other type connectors.

3.7 GROUNDING

A. Grounding shall conform to ANSI-J-STD 607(A) - Commercial Building Grounding and Bonding Requirements for Telecommunications, National Electrical Code® (2005), ANSI/NECA/BICSI-568-2006 and manufacturer's grounding requirements as minimum.

B. Bond and ground equipment racks, housings, messenger cables, and raceways.

C. Connect cabinets, racks, and frames to single-point ground which is connected to building ground system via #6 AWG green insulated copper grounding conductor

1. Telecommunication grounding must be isolated from other grounds.

a. The grounding connection shall not be made to electrical conduits, power distribution box grounds or neutral busses.

3.8 LABELING

A. Labeling shall conform to the ANSI/TIA/EIA-606(A) standards. In addition, provide the following:

1. Label each outlet with permanent self-adhesive label with minimum 3/16 in. high characters.

2. Label each cable with permanent self-adhesive label with minimum, 1/8 in. high characters, in the following locations:

a. Inside receptacle box at the work area.

b. Behind the communication closet patch panel or punch block.

3. Use labels on face of data patch panels. Provide facility assignment records in a protective cover at each telecommunications closet location that is specific to the facilities terminated therein.

4. Use color-coded labels for each termination field that conforms to ANSI/TIA/EIA-606(A) standard color codes for termination blocks.

5. Mount termination blocks on color-coded backboards.

6. Labels shall be machine-printed. **Hand-lettered labels shall not be acceptable**.

7. Label cables, outlets, patch panels, and punch blocks with room number in which outlet is located. Each cable shall be labeled to identify the room number and outlet to which it corresponds.

   a. Example: Room121 has 4 drops. The numbers would be 121.1, 121.2, 121.3, and 121.4. (**If this were a lab with 33 drops the last cable drop would end with 121.33)**

8. Mark up floor plans showing outlet locations, type, and cable marking of cables. Turn these drawings over to the owner two (2) weeks prior to move in to allow the owner's personnel to connect and test owner-provided equipment in a timely fashion.

9. The Cabling Contractor shall deliver three (3) sets of as-built drawings to the owner within four (4) weeks of acceptance of project by the owner. A set of as-built drawings shall be provided to the owner in electronic form and utilizing CAD software that is acceptable to the owner. The Cabling Contractor shall deliver the electronic media shall be delivered to the owner within six (6) weeks of acceptance of the project by owner.

3.9 TESTING

A. Testing shall conform to the ANSI/TIA/EIA-568-B.2-1 standard. Testing shall be accomplished using Level III or higher field testers.

B. Test each pair and shield of each cable for opens, shorts, grounds, and pair reversal. Correct grounded, and reversed pairs. Examine open and shorted pairs to determine if problem is caused by improper termination. If termination is proper, tag bad pairs at both ends and note on termination sheets.

   1. Perform testing of copper cables with tester meeting ANSI/TIA/EIA-568-B.2-1 requirements.

   2. If horizontal cable contains bad conductors or shield then remove and replace cable.

C. Test optical cable with a light source and power meter utilizing procedures as stated in ANSI/TIA/EIA-526-14A: OFSTP-14A Optical Power Loss Measurements of Installed Multimode Fiber Cable Plant. Measured results shall be plus/minus 1 dB of submitted loss budget calculations. If loss figures are outside this range, test cable with optical time domain reflectometer to determine cause of variation. Correct improper splices and replace damaged cables at no charge to the owner.

   1. Cables shall be tested at 1310 and 1550 nm for multimode optical fiber cables.

   2. Testing procedures shall utilize “Method B” – One jumper reference.

   3. Bi-directional testing of optical fibers is required.

D. Where any portion of system does not meet the specifications, correct deviation and repeat applicable testing at no additional cost to the owner.

E. All test data shall be provided with the “as built” drawings upon completion.

END OF SECTION 270500

SECTION 275123 - INTERCOM SYSTEM

PART 1 – GENERAL

1.01 GENERAL REQUIREMENTS

A. The conditions of the General Contract (General, Supplementary, and other Conditions) and the General Requirements are hereby made a part of this Section. The system shall be compatible with the existing St. Amant Freshman Academy Bogen system. Provide interconnection between this system and the existing system under this contract. Verify exact requirements and conduit/wiring required on site.

B. All bids shall be based on the equipment as specified herein. The catalog numbers and model designations are that of the Quantum Multicom IP hybrid IP.

C. Contractors that wish to submit alternate equipment shall provide the specifying authority with the appropriate documentation, at least 10 business days prior to bid opening. The submitted documentation must provide a feature by feature comparison identifying how the proposed equipment meets the operation and functionality of the system described in this specification. Contractor shall provide adequate and complete submittal information, prior to bid date, which shall include but not limited to specification sheets, working drawings, shop drawings, and a demonstration of the system. Alternate supplier-contractor must also provide a list to include six installations identical to the system proposed.

D. The contractor shall also provide the FCC registration number of the proposed system.

E. Final approval of the alternate system shall be determined at the time of job completion. Failure to provide the "precise functional equivalent" shall result in the removal of the alternate system at the contractor’s expense.

F. The contractor for this work shall be held to have read all of the bidding requirements, the general requirements of division 1, and contract proposal forms, and the execution of this work. The contractor will be bound by all of the conditions and requirements therein.

G. The contractor shall be responsible for providing a complete functional system including all necessary components whether included in this specification or not.

H. In preparing the bid, the contractor should consider that no claim will be made against the owner for any costs incurred by the contractor for any equipment demonstrations which the owner requests.

1.02 SCOPE OF WORK

A. Furnish and install all equipment, accessories, and materials in accordance with these specifications and drawings to provide a complete and operating school communications system including but not limited to:

1. Administrative display phone with integrated 4x16 character display
2. Administrative VoIP Phone
3. Administrative phone
4. Call Switches
5. Classroom VoIP speaker(s), ceiling- or wall-mounted
6. Classroom speaker(s), ceiling- or wall-mounted
7. Call initiation switches capable of placing normal, urgent or emergency calls
8. Telemedia control of VCRs, DVDs, and Blu-Ray
9. Built in Master Clock with 1024 events, 32 Schedules, including Daylight Savings Time, and up to 32 custom holiday events that can be assigned to any of the 64 time zones
10. One built-in network interface port for system combining and LAN station-to-station calling and WAN access for district-wide all-calls and remote management
11. One built-in network interface port for first-time system configuration
12. Built-in Web Server for full system programming with Quantum Commander
13. Administrative Web-Browser Application for Programming and Day to Day System Operation

B. System can connect to the PSTN (Public Switched Telephone Network) by connecting it to analog CO trunks.

1. Telephone service with public utilities shall be arranged by the owner, in conjunction with the equipment supplier. Equipment supplier shall generate a one-page document that will provide the Owner with information concerning number of outside lines (minimum of 8, and a maximum of 1,125 per school, maximum of 99 Schools [facilities]).

1.03 SUBMITTALS

A. Specification Sheets shall be submitted on all items including cable types.

B. Submit outline drawing of system control cabinet showing relative position of all major components.

C. Shop drawings, detailing integrated electronic communications network system including, but not limited to, the following:

1. Station wiring arrangement

2. Equipment cabinet detail drawing

D. Submit wiring diagrams showing typical connections for all equipment.

E. Submit a numbered Certificate of Completion for installation, programming, and service training, which identifies the installing technician(s) as having successfully completed the technical training course(s) provided by the system manufacturer.

1.04 QUALITY ASSURANCE

A. All items of equipment shall be designed by the manufacturer to function as a complete system and shall be accompanied by the manufacturer's complete service notes and drawings detailing all interconnections.

B. The contractor shall be an established communications and electronics contractor that has had and currently maintains a locally run and operated business for at least 5 years. The contractor shall be a duly authorized distributor of the equipment supplied with full manufacturer's warranty privileges.

C. The contractor shall show satisfactory evidence, upon request, that he or she maintains a fully equipped service organization capable of furnishing adequate inspection and service to the system. The contractor shall maintain at his or her facility the necessary spare parts in the proper proportion as recommended by the manufacturer to maintain and service the equipment being supplied.

1.05 SINGLE SOURCE RESPONSIBILITY

A. Except where specifically noted otherwise, all equipment supplied shall be the standard product of a single manufacturer of known reputation and minimum of 5 years experience in the industry. The supplying contractor shall have attended the manufacturer's installation and service school. A certificate of this training shall be provided with the contractor's submittal.

1.06 SAFETY / COMPLIANCE TESTING

A. The communications system shall bear the label of a Nationally Recognized Testing Laboratory (NRTL) such as ETL, and be listed by their re-examination service. All work must be completed in strict accordance with all applicable electrical codes, under direction of a qualified and factory approved distributor, to the approval of the owner.

B. The system is to be designed and configured for maximum ease of service and repair. All major components of the system shall be designed as a standard component of one type of

card cage. All internal connections of the system shall be with factory-keyed plugs designed for fault-free connection.

C. The printed circuit card of the card cage shall be silk-screened to indicate the location of each connection.

1.07 IN-SERVICE TRAINING

A. The contractor shall provide a minimum of eight hours of in-service training with this system. These sessions shall be broken into segments, which will facilitate the training of individuals in the operation of this system. Operators Manuals and Users Guides shall be provided at the time of this training.

1.08 WIRING

A. System wiring and equipment installation shall be in accordance with good engineering practices as established by the EIA and the NEC. Wiring shall meet all state and local electrical codes. All wiring shall test free from all grounds and shorts.

B. All communication system wiring shall be labeled at both ends of the cable. All labeling shall be based on the room numbers as indicated in the architectural graphics package.

1.09 PROTECTION

A. The contractor shall provide all necessary transient protection on the AC power feed and on all station lines leaving or entering the building.

B. The contractor shall note in his system drawings, the type and location of these protection devices as well as all wiring information. Such devices are not to be installed above the ceiling.

1.10 SERVICE AND MAINTENANCE

A. The contractor shall provide a five year equipment warranty of the installed system against defects in material and workmanship. All materials shall be provided at no expense to the owner during normal working hours. The warranty period shall begin on the date of acceptance by the owner/engineer.

B. The contractor shall, at the owner's request, make available a service contract offering continuing factory authorized service of this system after the initial warranty period.

C. The system manufacturer shall maintain engineering and service departments capable of rendering advice regarding installation and final adjustment of the system.

PART 2 - EQUIPMENT SPECIFICATION

2.01 MANUFACTURERS

A. Manufactures: Subject to compliance with requirements specifications, provide the following system:

1. Quantum Multicom IP manufactured by Bogen Communications, Inc., Memphis, TN, Mahwah, NJ, and Orlando, FL and Made in the United States of America or approved equal.

B. The Specifying authority must approve any alternate system.

C. The intent is to establish a standard of quality, function and features. It is the responsibility of the bidder to insure that the proposed product meets or exceeds every standard set forth in these specifications.

D. The functions and features specified are vital to the operation of this facility; therefore, inclusion in the list of acceptable manufacturers does not release the contractor from strict compliance with the requirements of this specification.

2.02 EQUIPMENT

A. CONSOLE

1. MCRMP / MCMP / QRC24-48 (Compact Rack System)

   Rack Mount full, Mini-System, or Wall Mount panel. Shall include the following components:

   Quantum Processor Card
   Analog Card
   Station Card
   Telephone Interface Card
   5 volt / 12 volt Power Supply
   26 volt Power Supply(s)
   Audio Program Module Interface Assembly

2. MCRMF / MCMF / QCR24-48

a. MCRMF Rack mounting mainframe. Includes built-in ventilation fans and the following circuit cards:

   Quantum Processor Card
   Analog Card
   Station Card
   Telephone Interface Card
   Ribbon Cable Assembly

b. MCMF Wall Mount mounting mainframe. Utilizes convection cooling and the following circuit cards:

   Quantum Processor Card
   Analog Card
   Station Card
   Telephone Interface Card

c. QCR24 / QCR48 Compact Quantum Rack System Mainframe (1 per Mini-System). Includes built-in ventilation fan and the following circuit cards:

   Quantum Processor Card
   Analog Card
   Station Card
   Telephone Interface Card

3. MCRRP / MCRRC / MCRC

   1. Relay Module/Card

4. MCCA / MCRCA / MCRCA60

   a. Ribbon Cable Assemblies

5. Program Sources

   a. AM/FM Tuner CD Player
   b. AM/FM Tuner
   c. Desktop Paging Microphone

6. 25 Volt Power Amplifiers

   a. 60-Watt Amplifier
   b. 125-Watt Amplifier
   c. 250-Watt Amplifier

7. Station Equipment

a. Administrative Display Phone
b. Administrative VoIP Phone
c. Administrative Wall-Mount Phone
d. Administrative Desktop Phone
e. Wall Baffle VoIP Speakers
f. Ceiling VoIP Speakers
g. Secure Call - Call Assurance Call-in Switch
h. Rocker-style Call switch with Privacy
i. Rocker-style Call Switch

8. Optional Equipment

   a. Telephone Access Card

2.03 COMPONENTS AND DESCRIPTIONS

A. The Quantum hybrid IP intercom must be capable of supporting the existing Multicom 2000 hardware and functions as well as the new features across the Quantum Processor's interfaced over the LAN. The VoIP capabilities of the QSPC1 Quantum Processor Card will enable the support of the features across the various processors' nodes. The sections below cover how the system will handle each of the existing and the new features in the QSPC1 product. Systems that do not allow the reuse of existing equipment or are not backwards compatible shall not be deemed acceptable. Systems that don't allow processors/nodes to be seamlessly integrated via the LAN are not considered equal.

B. Quantum Multicom IP

1. The Quantum facility shall have a minimum of one node/processor and a maximum of up to 75 networked nodes/processors. A maximum of up to 99 facilities can be networked into a Quantum IP district.

2. The station numbers, program buses, etc. shall be identified with a QSPC1#, Station card# and port# or QSPC1#, program#.

3. Audio Information will be transmitted between the processors on the LAN using VoIP technology. Quantum will utilize all of the existing Multicom 2000 hardware except the current processor card. Thus making Quantum Multicom IP backwards-compatible with existing Multicom 2000 systems.

4. The processor software shall be upgradeable via Quantum Commander. After rebooting the nodes the software upgrade will be complete. If for some reason the newly installed software will not boot properly, the system shall revert to the previous working software load.

5. It shall be possible for Quantum schools to make 'station-to-station' calls and 'inter-facility All-Call paging' to a single facility or all Quantum facilities in a district using VoIP technology. Systems that require software to be loaded onto an external server or

computer to make 'station-to-station' calls and 'inter-facility All-Call paging shall not be considered equivalent.

6. The primary processor shall be configured to act as a VoIP Call Manager for facility point-to-point calls. Using Quantum Commander, every facility shall be configured with the IP addresses of the primary processor systems of all the other known facilities (maximum of 98 additional), and an organizationally private multicast IP address is to use the 239.0.0.0/8 scope. Additionally, multicast best practices recommend avoiding 239.0.0.x, 239.0.1.x, and 239.128.1.x address scopes which shall be used for facility and inter-facility paging.

7. The maximum number of simultaneous inter-facility intercom calls supported is based on the actual performance of the WAN and the CPU load. The voice quality of the inter-facility calls may vary based on the WAN conditions the maximum network intercom call uses 14.4 kbps (uni-cast) maximum for audio distribution (i.e. mp3 player, AM/FM tuner and or CD player) is 308 kbps (multi-cast).

8. The system shall facilitate the playing of audio clips repetitively played until stopped by the Quantum Commander User an administrative display phone MCDS4 or a dry contact closure.

9. A built-in Master Clock, with battery backup, shall be included to automatically control class change or other signals. The Master Program Clock shall have 1024 events that may be programmed into any of the 32 time signaling schedules, and up to 32 flexible holiday schedules. The schedules shall be nameable for easy selection when assigning schedules to days or in the event of an override. Systems that rely on external master clock shall not be considered equivalent.

10. Network Time Synchronization. The system shall be capable of periodic update/synchronization of the processor's time with a Network Time Server running NTP via the school's LAN network. Systems that do not provide Network Time Synchronization will not be deemed equivalent.

11. Network Failure – in the event of a network failure the multi-node facilities with traditional intercom wiring will continue to work autonomously providing the facility with all scheduled events stored in each of the nodes local non-volatile memory and ability to connect an administrative phone to the local node for paging in the event of network failure. Systems that do not provide autonomous operation shall not be considered equal.

12. Multi-Node Survivability – the system shall provide Multi-Node Survivability in the event of a processor card failure. If either the primary processor or secondary processor fails the remaining processor will take over as primary. Systems that do not provide Multi-Node Survivability shall not be considered equivalent.

13. Station in a Multi-Node system shall support any or all station types specified in section 2.02 A. 8. Systems that don't support all types of station or require different head end equipment are not considered equivalent.

C. Quantum Commander

1. The processor utilizes a web-based programming tool. The Quantum Commander is built into the QSPC1 processor card and upon boot up, users can login to the Quantum Commander Web Server via compatible web browser. Systems that require software to be loaded onto an external server/pc for web-based programming shall not considered equivalent. Systems that require com port redirector software or serial to Ethernet adapters are not deemed equal

1. The Quantum Commander shall be divided into three access levels depending on user access credentials. Systems that do not provide at least three (3) Levels of access are not equivalent. The three levels are:

   a. User
   b. Administrator
   c. Technician

2. Only the Administrator and Technician shall have access to add/delete/modify the database objects.

3. Users shall have display only access to see the data objects that include configuration, alarms, and performance data and perform certain operations based on the user's CoS (Class of Service).

4. The following Menu Items must be available on the Multicom IP Quantum Commander:

   A. File - Open Database, New System, Save, Delete, Report and Exit, Upload Database, Download Database, Download Software, Diagnostics, Tones and Announcements, Relay Configuration, Program Distribution, Media Assignment, List Passwords, Add Password, Change Password, and Call Detail Reporting.

D. Administrative Display Phone

1. Administrative Display Phones shall be Bogen Model MCDS4. The administrative telephone display panel shows the time of day and day of week, the current time signaling schedule, and the station numbers and call-in priority of staff stations that have called that particular station. A 3-key response is used to scroll the display, and answer or erase normal, urgent, and security calls. Depending upon the system programming, an administrative station can use display menus to activate zone pages, alarm signals and external functions, as well as select program sources and distribute or cancel a program to any or all speakers or zones.

2. Administrative Display Phones shall have the ability to dial and have the option of dialing either the loudspeaker or phone at each station location. The system shall automatically switch from phone-to-intercom communication to phone-to-phone communication when the enhanced staff phone on the receiving end of the call is lifted.

3. The Administrative Display Phone shall display the classroom number of any station that calls 911. This feature will notify the main office when a classroom has dialed 911 emergency centers so that administrators can direct emergency personnel to the correct physical location in the building when they arrive. Systems that do not provide this feature will not be deemed equal.

4. Administrative Display Phones shall have the ability to manually override the active schedule in the facility. Systems that do not have the ability to override the schedule via the administrative phone are not equal.

E. Administrative Wall Display

1. Administrative wall display shall be a Bogen Model MCWD. The wall display shows the time of day, current time signaling schedule that is running, and the station numbers and call-in priority of call switches, and emergencies from Administrative VoIP Phone and Administrative Phones.

2. The Administrative Wall Display shall display the classroom number of any station that calls 911. This feature will notify the main office when a classroom has dialed the 911 emergency centers so that administrators can direct emergency personnel to the correct physical location in the building when they arrive. Systems that do not provide this feature will not be deemed equal.

F. Administrative Phone

1. Classroom phones shall be one of the following Bogen Model(s)

   a. QSIP1 – Administrative VoIP Phone (Desk or Wall)

2. When a station goes off-hook and dials the 3- to 6-digit (preceded by an * if calling a telephone instead of loudspeaker) number of the desired station. The call is routed to any station (admin/staff).The classroom phone shall be capable of the following features depending on how the station CoS is configured:

   a. Emergency Call involves going off hook and flash hook the switch at least four times within 3 seconds. The Call is then switched to the assigned Admin Phone. This requires the display of the architectural number on the Administrative Display phone and or Wall Display. Systems that do not provide this feature are not equivalent.

   b. Alarm Distribution

   c. Audio Program toggle On/Off

   d. Call Forward activation for All-Calls/Busy/No Answer/Busy or No Answer

   e. Cancel Call Forward

   f. Conference Calling

g. Transfer Call

h. Dial administrative display phone, dial the station number to call to the speaker or dial the station number preceded with * to call the phone. The call shall be routed to the administrative display phone and/or administrative wall display showing the architectural number that is calling.

i. Emergency All-Call shall be broadcasted to all the stations in the facility.

j. Place Outside Call

k. Remote Answer

l. Single-Zone/All-Station Page

m. Call Waiting Tone for Outside Calls, and it shall be possible to feed the call waiting tone to the Administrative Phone during a conversation.

G. VoIP Phone

1. The Station goes Off-Hook and dials the 3- to 6-digit (preceded by an * if calling a telephone instead of loudspeaker) number of the desired station. The call is routed to any station (admin/staff).The classroom VoIP phone shall be capable of the following features:

a. Speed dials

b. Missed call logging

c. Ethernet pass through jack

d. PoE

e. Alarm Distribution

f. Audio Program On/Off

g. Call Forward activation for All-Calls/Busy/No Answer/Busy or No Answer

h. Cancel Call Forward

i. Dial administrative phone, dial the station number to call to the speaker or dial the station number preceded with * to call the phone. The call shall be routed to the administrative display phone and/or administrative wall display showing the architectural number that is calling.

j. Emergency All-Call shall be broadcasted to all the stations in the facility.

k. Place Outside Call

l. Single-Zone/All-Station Page

H. Classroom Call Staff Stations

a. Staff Stations shall be Bogen Model:

1. CA15C – Call Switch

b. Shall be capable of Normal/Urgent/Emergency Calls

c. Normal/Urgent Call involves pressing the Call Switch once or lifting the Telephone Handset. The Call is then switched to the Administrative Display Phone. This requires the display of the architectural number on the Administrative Display Phone and/or Wall Display.

d. Emergency Call involves pressing the emergency call switch at least 4 times with Call Level Normal or Urgent; pressing the call switch one time with Call Level Emergency only. The Call is then switched to the Administrative Display Phone. This requires the display of the architectural number on the Administrative Display Phone and/or Wall Display.

e. Emergency Link Transfer - If the emergency call is unanswered by the Administrative Display Phone and the emergency link transfer is provisioned and programmed; the emergency call will be forwarded to the loudspeaker associated with that station. Any station/admin phone with speaker can be programmed for the Emergency Link Transfer except the Administrative VoIP Phone. Systems that do not provide Emergency Link Transfer will not be considered equal.

f. In addition the SC1 is a Call Assurance Call-In Switch provides a visual LED confirmation that a call-in request has been logged with the Quantum system. Pushing the SC1's momentary rocker switch initiates a request for service to the Quantum system. The Quantum system then acknowledges this request by signaling back to the initiating SC1, which then illuminates its LED annunciator. The LED will remain lit until the call-in is serviced. At the end of the call, the LED will extinguish. The LED will also extinguish if the Quantum system's call queue containing the station's call request is cleared, or if the station's call request is individually cleared by the administrative station without responding.

I. Classroom VoIP Speakers, wall-mounted

a. Classroom VoIP Speakers shall be Bogen:

1. Wall Baffle VoIP Speakers: WBS810QIP

b. Classroom VoIP Stations shall support the following station types:

1. HS201C or HS-202C – Bogen Handsets

2. CA15C – Call Switch

c. The VoIP Speakers shall have a line level output

d. Shall be capable of Normal/Urgent/Emergency Calls

e. Normal/Urgent Call involves pressing the Call Switch once or lifting the Handset. The Call is then switched to the Administrative Display Phone. This requires the display of the architectural number on the Administrative Display Phone and/or Wall Display.

f. Emergency Call involves pressing the call switch at least 4 times within 3 seconds with Call Level Normal or Urgent; pressing the call switch one time with Call Level Emergency only. The Call is then switched to the Administrative Display Phone. This requires the display of the architectural number on the Administrative Display Phone and/or Wall Display.

g. Emergency Link Transfer - If the emergency call is unanswered by the Administrative Display Phone and the emergency link transfer is provisioned and programmed; the emergency call will be forwarded to the loudspeaker associated with that station. Any station/admin phone with speaker can be programmed for the Emergency Link Transfer except the Administrative VoIP Phone. Systems that do not provide Emergency Link Transfer will not be considered equal.

h. The Classroom VoIP Speakers shall be IEEE 802.3af compliant. VoIP speakers may be placed up to 100 meters (328 Feet) from switch.

i. Software adjustable audio output level - 5 power levels available 4W, 2W, 1W, 1/2W, 1/4W

j. DHCP Deployment for easy install

J. Intercom System Speakers

b. Classroom Speakers shall be Bogen:

1. Wall Baffle VoIP Speakers: WBS810QIP Wall Baffle VoIP Speaker

c. Hallway Speakers shall be Bogen:

1. Wall Baffle VoIP Speakers: WBS810QIP Wall Baffle VoIP Speaker

d. Outdoor Speakers shall be Bogen:

1. KFLDS30T Wide Dispersion Reentrant Horn Loudspeakers

e. Common Area Speakers shall be Bogen:

1. HFCS1 High-Fidelity Ceiling Speakers

2.04 SYSTEM PARAMETERS

A. The communication system shall be a Bogen Quantum Multicom IP, and shall provide a comprehensive communication network between administrative areas and staff locations throughout the facility. Non-volatile memory shall store permanent memory and field-programmable memory. A system, which uses a battery to maintain system configuration information, shall not be acceptable.

The system shall provide no less than the following features and functions:

1. Telephonic communication (complete with DTMF signaling, dial tone, ringing and busy signals, and data display) on administrative stations shall use two wires. Systems that use more than two wires for communication, tones and data display shall not be acceptable.

2. Amplified-voice communication with loudspeakers shall use a shielded audio pair (shield can be used as one of the two required conductors for administrative phone or call-in switch).

3. The system shall be available in the following configurations:

   a. MC2K Wall-mounted in a custom enclosure Quantum. Station capacity shall be from 24 to 120 stations +10 SIP ports per Node. All stations shall have the ability to support displays, with an option to add up to 15 Central Office phone lines.

   b. MC2KR Rack-mounted Quantum. Station capacity shall be from 24 to 240 stations +10 SIP ports per Node. All telephone stations shall have the ability to support displays, with an option to add up to 8 Central Office phone lines.

   c. QRC24 & QRC48 Compact Quantum Rack System. Station capacity shall be from 24 to 48 stations +10 SIP ports per node. All stations shall have the ability to support displays, with an option to add up to 8 Central Office phone lines.

   d. 2223/2233 MC2KR Rack-mounted and integrated with Bogen Multi-Graphic Series 2223 or Series 2233 equipment. In this configuration, Quantum Multicom IP system station capacity shall be expandable up to 240 stations in increments of 24 per node. All telephone stations shall have the ability to support displays. The Multi-Graphic system equipment provides the following: backup fail safe intercom and paging functions (Note: the systems operate independently; if one were to fail, the other provides intercom for student safety), plus two additional program channels, and additional Multi-Graphic functions. It shall be possible, by use of a separate call-in switch, to annunciate only to the Multi-Graphic portion of the system without using additional station ports within the Quantum Multicom IP system. For switch banks to work effectively the equipment must be centrally located for switch-bank operation.

      The above system configurations represent a single processor in the Quantum Multicom IP. Each processor can be combined with up to 74 additional systems

(nodes) for a total single facility capacity of up to 18,750 stations.

4. The system shall consist of any combination of the following: Administrative Display Phones, Administrative VoIP Phones, and Administrative Phones.

    a. Staff Classroom Stations shall consist of wall- or ceiling-mounted loudspeakers with call-in switches.

    b. Administrative phone stations shall consist of VoIP phones, display phones, or DTMF dialing 2500 analog-style telephone sets.

    c. Administrative Display Phones shall be DTMF-dialing digital telephone sets with a 4x16 character LCD display panel. They shall be equipped with a standard 12-key push-button dialing keypad. Phones requiring external LCD displays shall not be accepted as an equal. Optionally, a loudspeaker may be connected at each administrative station location.

        1. Up to 5 Administrative Wall Displays may be added to the Administrative Station for large office areas.

    d. Administrative Display Phones, Administrative VoIP Phones, and Administrative Phones shall have the option of including a loudspeaker.

    e. All types of stations except administrative VoIP phones shall utilize the same type of field wiring. Future station alterations shall only require the station type to be changed and the proper software designation to be selected. Alterations shall not require field wiring or system head-end alterations. All field wiring and system head-end equipment shall support any type of station, at the time of installation. All contractor proposals shall reflect this capacity. Failure to submit and bid this project in this manner will be deemed as being in direct conflict of these specifications and will be rejected.

    f. There shall be no limit to the number of administrative display stations within the total capacity of the system including nodes. Systems that require different head-end equipment to make admin phone work shall not be acceptable.

    g. It shall be possible at any time to change the type of station at any location without equipment or wiring changes except for administrative VoIP phones that utilize existing LAN connections. Systems that limit the quantity of each station type or require future additional equipment and/or system expansion to provide additional administrative telephones shall not be accepted as an equal.

5. The system shall be a global switching system, providing up to 600 unrestricted simultaneous private telephone paths per facility. The system shall also be capable of providing up to 600 amplified intercom paths per facility. One amplified intercom path shall automatically be provided with each increment of 24 stations of system capacity. All hardware, etc., required to achieve the necessary number of amplified-voice intercom channels for this system shall be included in this submittal. Amplified-voice intercom channels shall provide voice-activated switching. Systems requiring the use of a push-

to-talk switch on administrative telephones shall not be acceptable. There shall be an automatic level control for return speech during amplified-voice communications. The intercom amplifier shall also provide control over the switch sensitivity and delay times of the VOX circuitry.

6. The system shall provide 911 Dial-Through with specific outside line(s) dedicated only for this function to ensure that the line is available all the time for 911 calls. The 911 Dial-Through is available to any station that can dial.

    a. The 911 CO lines can be pre-configured and reserved. If the 911 reserved lines are busy, the normal CO lines will be connected to route the 911 calls. If all the normal CO lines are busy, then one of the ongoing call shall be disconnected and the 911 call shall be placed.

    b. When 911 is dialed from an Administrative VoIP Phone or Administrative Phone its Administrative Display Phone or Wall Display will receive a message that that room dialed 911.

7. It is of highest importance that emergency calls from staff stations receive prompt attention. Therefore, it is important that there be an alternate destination in case the emergency call does not get answered at the primary location. To this end:

    a. Staff-generated Emergency calls shall be treated as the second highest system priority. Therefore, all Emergency calls shall annunciate at the top of the call queue of their respective administrative display phone. Should that emergency call go unanswered for 15 seconds, the call shall be re-routed to an alternate speaker station then a tone prompts the caller to make a verbal call for help. During the transfer, the original administrative telephone shall continue to ring the distinctive Emergency Ring. Should the Emergency Transfer to Station have an associated administrative telephone, it too shall ring the distinctive Emergency ring.

    b. The Emergency Transfer to Station shall be field programmable.

    c. Should the original administrative display phone be engaged in a non-emergency conversation, its conversation shall be automatically terminated, indicated with an alert tone, and then reconnected to the station that generated the Emergency Call.

    d. Should the administrative display phone be engaged in an emergency conversation, successive emergency calls shall log into the call queue as well as transfer to the Emergency Transfer Station for their verbal call for help. Upon termination of the initial emergency conversation, the next one shall immediately ring the administrative telephone.

    e. Systems failing to transfer unanswered Emergency calls or failing to immediately connect to the administrative display phone shall not be deemed as equal.

8. There shall be a System-Wide Facility Emergency All-Call feature. The Emergency All-Call shall be accessed from designated administrative phones or by the activation of an external contact closure which shall give the third audio program input emergency

status. The Emergency All-Call function shall have the highest system priority and shall override all other loudspeaker-related functions including Time Tones, Normal All-Call or Zone Pages or Audio Distribution.

a. Considering that emergencies calls are to be treated with the highest level of concern. Systems which do not regard Emergency-All-Call page from an administrative station with the highest priority shall not be deemed as equal.

b. Upon picking up the receiver and dialing "9", a menu shall appear on the display prompting the user to enter each subsequent digit. In this way, the user shall not be required to memorize complicated key sequences in order to access emergency functions.

c. The Emergency All-Call shall capture complete system priority, and shall be transmitted over all speakers in the facility. It shall also activate an external relay, which can be used to automatically override volume controls and other sound systems.

d. Systems without Emergency All-Call, or systems with All-Call that cannot be activated by external means, or which do not capture complete system priority or activate an external relay, shall not be acceptable.

9. There shall be at least four Dedicated Emergency Alarm Tones. Each may be accessed by dialing a three-digit number from designated administrative display phone. These emergency tones should be separate from the time tones. Systems using external alarm generators, or having less than four emergency alarm tones shall not be acceptable.

   a. Upon picking up the receiver and dialing "9", a menu shall appear on the display prompting the user to enter each subsequent digit. In this way, the user shall not be required to memorize complicated key sequences in order to access Emergency Alarm Tones.

10. There shall be four (4) External-Function Relay Driver Outputs, accessible from designated Quantum Commander User or Administrative Display Telephones by dialing a four-digit number. These outputs remain set until accessed and reset at a later time. The user shall have the ability to review the status of each relay driver. A plain English menu, prompting the user through the fields without requiring the user to remember any dialing sequences shall support this feature. Systems that require the user to remember complicated dialing schemes or prompt the user via cryptic commands shall not be deemed equal.

    a. The stations shall be capable of being programmed for security contact relays for use with magnetic locks, motion detectors, cameras or any low-voltage, dry contact creating device. System using security stations for control of external functions shall not be acceptable.

    b. Upon picking up the receiver and dialing "9", a menu shall appear on the display prompting the user to enter each subsequent digit. In this way, the user shall not be

required to memorize complicated key sequences in order to access external relay functions.

11. There shall be a program-material interface included with each node, which shall accept up to four (4) program input modules. Systems requiring an external program source interface shall not be acceptable.

12. There shall be an outside line feature. The circuitry shall interface with the station ports of an external telephone system or CO lines, and shall provide facilities for up to 1,125 incoming lines per facility which shall be designated by the user to ring "day" and "night" administrative display stations or administrative stations. Where an administrative display station is designated to receive outside line calls, the phone shall ring with a unique tone and the outside line number shall appear on the display panel. The option shall also provide the ability to make outside line calls from Administrative Display Stations or Administrative Stations. This ability shall be programmable for each phone and there shall be thirty-two Classes of Service available to any station. This feature shall be capable of supporting DID, DISA, and a Security DISA function.

    a. Cellular system access for Security is of the utmost concern. Wireless security page offers a password-protected Security DISA feature that shall be accessible only from authorized Police, Fire, Emergency personal or an off-premise security office, which monitors the facility's security system. It shall function as follows: upon confirmation of the password DISA number, the system shall allow security personnel to dial access any station and monitor the activity without pre-announce tone or the privacy tone. This will then allow the security office to determine exactly what the conditions are in the station and the actions need to be taken.

13. The system shall provide for field-programmable three-, four-, five-, or six-digit architectural station numbers.

14. There shall be an automatic level control for return speech during amplified-voice communications.

15. Each station loudspeaker shall be assignable to any one, any combination, or all of 64 Multi-purpose zones or any of the 18,000 hard-wired zones per facility.

    a. Each station loudspeaker shall be assignable to any one, any combination, or all of 64 Multi-purpose zones. Systems with less than 64 Multi-purpose zones shall not be acceptable.

16. There shall be thirty-two (32) Flexible Time-Signaling Schedules with a total of 1024 user-programmed events per facility. Each event shall sound one of user-selected tones or external audio. It shall be possible to assign each schedule to a day of the week, or manually change schedules from an authorized Quantum Commander User via Web browser or MCDS4 phone. Systems, which do not provide a minimum of thirty-two (32) flexible time-signaling schedules or a choice of eight (8) time tones plus external audio, shall not be acceptable.

17. An internal program clock (with battery backup) shall be included, allowing a total of 1024 user-programmed events per facility. It shall be possible to synchronize the internal program clock with an external master clock. Systems, which do not provide an internal program clock and/or can not synchronize with an external master clock to meet these specifications, are not equal.

    a. There shall be thirty-two (32) flexible time-signaling schedules. It shall be possible to assign each schedule to a day of the week, or manually change schedules from an authorized Quantum Commander User via Web browser on the LAN or WAN. Systems that require external equipment or server to perform these functions are not considered equivalent.

    b. The built-in Master Clock corrects time by accessing the networks Network Time Server.

    c. The Quantum Processor is capable of adjusting the Daylight Savings Time automatically.

    d. Each event shall be able to be directed to any one or more of the sixty-four (64) Multi-purpose time-signaling zones.

    e. Each of the 64 Multi-purpose zones shall have a programmable "tone duration" unique unto itself. For example: the gymnasium can receive a time tone for ten (10) seconds while the rest of the facility receives a tone for five (5) seconds.

    f. Each event shall sound one of eight (8) user-selected tones or external audio. Each event may utilize a different custom tone. It shall be utilized to send the gymnasium, shop classes, and pool (if necessary), a separate time tone to indicate "clean up." Minutes later the entire facility can then receive the same time tone to indicate class change.

    g. Each of the eight (8) Distinct Time Tone Signals may be manually activated by selected Administrative Display Phones or an authorized Quantum Commander User via web-browser. These tone signals shall remain active as long as the telephone remains off-hook, or until canceled from the keypad or Quantum Commander.

        1. Upon picking up the receiver and dialing "9", a menu shall appear on the display prompting the user to enter the next digit. In this way, the user shall not be required to memorize complicated key sequences in order to access manual time-tone functions.

        2. Systems that do not provide at least thirty-two (32) flexible time signaling schedules or do not provide automatic activation of schedules shall not be acceptable.

18. There shall be a zone-page/all-page feature that is accessible by selected administrative VoIP phones and administrative phones.

a. There shall be automatic muting of the loudspeaker in the area where a page is originating.

b. There shall be a pre-announce tone signal at any loudspeaker selected for voice paging.

19. There shall be a voice-intercom feature that is accessible by selected administrative phones, administrative VoIP phones and all administrative display phones.

    a. There shall be a privacy tone every 16 seconds to signal at any loudspeaker selected for amplified-voice intercom is in progress.

    b. There shall be a pre-announce tone signal at any loudspeaker selected for voice-intercom communication.

    c. Privacy and pre-announce tone signals shall be capable of being disabled during system initialization.

    d. There shall be an automatic switchover to private telephone communication should the person at the loudspeaker pick up his analog phone handset.

    e. By picking up the receiver and dialing the first digit of the number of the station to be called, that number shall appear on the display along with a loudspeaker symbol, prompting the user to enter the next digits. There should be no confusion as to type of conversation, whether speaker/intercom or telephonic to be established.

20. There shall be a telephonic communication feature, which is accessible by all Administrative VoIP Phones, Administrative Phones, and Administrative Display Phones.

    a. There shall be an audible ring signal announcing that a call has been placed to that station.
    b. Upon picking up the receiver and dialing * (star), a telephone symbol shall appear on the display, prompting the user to enter the number of the station to be called. There should be no confusion as to type of conversation, whether speaker/intercom or telephonic to be established.

    c. There shall be an automatic disconnect of enhanced Staff Handsets left off-hook to prevent them from tying up communications channels. The station shall receive a busy signal and shall automatically disconnect after 45 seconds.

    d. There shall be an automatic disconnect of Administrative Display Phones and Administrative Phones to prevent them from tying up communications channels. When a phone goes off-hook and does not initiate a call within ten seconds, the station shall receive a busy signal and shall automatically disconnect after 45 more seconds.

    e. Staff and Administrative Phone Stations may be programmed to ring an Administrative Display Phone during day hours and another Administrative Display Phone during night hours. Day and Night Hours shall be user-programmable.

Assignment of Staff Stations shall not be restricted to any particular Administrative Station. Systems that limit the number and assignment of staff call-in to particular Administrative Display Station of Administrative Stations shall not be acceptable.

21. Each staff call station shall be programmable for one of three call-in types, as follows:

    Normal / Emergency
    Urgent / Emergency
    Emergency

    a. Staff Call Stations programmed for access Normal / Emergency or Urgent / Emergency shall be able to initiate an emergency call by repeated flashing of the hook switch or repeated pressing of the call-in switch. Systems, which require additional switches and/or conductors to initiate an emergency call, shall not be acceptable.

    b. Emergency Calls from Administrative VoIP Phones, Administrative Phones or Staff Call Switch Stations shall interrupt a non-emergency call in progress at the designated Administrative Display Phone. The administrator shall receive a warning tone and be connected to the emergency caller. The disconnected party shall receive a busy signal. Systems which do not provide emergency call interrupt shall not be acceptable.

    c. It shall be possible to connect a single push emergency call-in switch to any Administrative Phone, without effecting normal station operation. This feature is not available with the Administrative VoIP Phone.

    d. Normal and Urgent calls shall be logged into queue for the designated administrative display phones.

    e. Administrative Display Phones shall ring for a period of 30 seconds when they receive a call, and then stop ringing.

    f. Each queue shall first be sorted according to call priority (emergency calls, then urgent calls, and then normal calls). Calls are sorted within each priority level on a first-in, first-out basis. When a call is answered, it shall automatically be removed from the queue. Systems, which do not sort calls according to priority and order received, shall not be acceptable. 1) The display shall simultaneously show up to four (4) Staff Call Switch Station Calls pending. Additional calls, beyond four (4), shall be indicated by an arrow pointing down thus prompting the user that additional calls are waiting.

    g. It shall be possible to answer any incoming call simply by picking up the handset while it is ringing. It shall not be necessary to hit any buttons to answer a call unless the call has dropped into the queue.

22. Administrative VoIP Phones shall receive dial tone upon going off-hook. Outgoing calls are made by dialing the desired station. Incoming calls can be directed to the telephone or to the associated loudspeaker for a hands-free reply. There shall be a switchover from

loudspeaker to private telephone communication when a person picks up the handset and dials #### and enter (check mark).

a. Administrative VoIP Phones shall be able to make a normal call to any Administrative Display Phone by dialing the number. They shall also be able to initiate an Emergency Call by dialing ****. Emergency Calls shall ring the Designated Day/Night Administrative Display Phone. The system shall provide for each station to have a PIN Numbers. By dialing the PIN at any system telephone, the administrator shall have access to emergency paging regardless of the restrictions on the particular phone being used.

23. Administrative Phones MCESS or MCWESS shall receive dial tone upon going off-hook. Outgoing calls are made by dialing the desired station. Incoming calls can be directed to the telephone or to the associated loudspeaker for a hands-free reply. There shall be an automatic switchover from loudspeaker to private telephone communication should the person pick up the handset.

    a. Administrative Phones shall be able to make a normal call to any Administrative Phone by dialing the number. They shall also be able to initiate an Emergency Call by flashing the hook switch four times. Emergency Calls shall ring the Designated Day/Night Administrative Display Phone and then their speaker will be connected to the emergency link station if not answered within a predetermined time period. The system shall provide for each station to have a PIN Numbers. By dialing the PIN at any system telephone, the administrator shall have access to emergency paging regardless of the restrictions on the particular phone being used.

24. Administrative Display Phones shall be equipped with a 4x16 character alphanumeric display panel.

    a. Administrative Display Phones shall receive dial tone upon going off-hook. Outgoing calls are made by dialing the desired stations. Incoming calls can be directed to the telephone or to the associated loudspeaker for a hands-free reply. There shall be an automatic switchover from loudspeaker to private telephone communication should the person pick up his handset.

    b. The display shall normally show the time of day and day of week, the current time signaling schedule, and the numbers of up to four stations calling in along with the call-in status of each station (normal, urgent, emergency). When dialing from the Administrative Display Phone, the display shall indicate the station number and type of station (loudspeaker or handset) being dialed.

    c. The display shall also provide user-friendly menu selections to assist the operator when paging and distributing program material. Displays shall be in English with internationally recognized symbols for maximum ease of use. Systems, which require the operator to memorize long lists of operating symbols or control codes, shall not be acceptable.

d. Administrative Display Phones shall be programmable for one of 3 station types for system access, as follows:

1. Shall permit dialing any station in the system; turn program material on/off at their location; scroll, erase and auto-dial call-waiting queue; make conference calls and transfer calls; call forward to other administrative stations; make all-zone pages and emergency all-zone pages; have access to outside lines and be designated to receive outside line calls.

2. Select and distribute or cancel program material to any combination of stations, paging zones, or all zones; set/reset alarm/external functions and zone paging.

3. Bump or join a conversation in progress, manually initiate time tones.

e. Program selection, and its distribution or cancellation shall be accomplished from a designated administrative display telephone, with the assistance of the menu display system. Distribution and cancellation shall be to any one, or combination of speakers, or any zone(s), or all zones. It shall be possible to provide three program channels at the same time.

f. It shall be possible, via an Administrative Display telephone, to manually initiate any of eight (8) tones or any of the emergency tones. The tones shall be separate and distinctly different from the emergency tones. The tone selected shall continue to sound until it is canceled, or until the administrative display phone is placed back on-hook.

g. Each Administrative Display Phone shall maintain a unique queue of all stations calling that particular phone.

25. Classroom VoIP Speaker, Wall Baffle- or Ceiling-Mounted shall be programmable for one of three call-in types, as follows:

Normal / Emergency
Urgent / Emergency
Emergency

h. VoIP Speaker Stations can be programmed for access Normal / Emergency or Urgent / Emergency shall be able to initiate an emergency call by repeated flashing of the hook switch or repeated pressing of the call-in switch. Systems, which require additional switches and/or conductors to initiate an emergency call, shall not be acceptable.

i. Emergency Calls from VoIP Speaker Call-Switch Stations shall interrupt a non-emergency call in progress at the designated Administrative Display Phone. The administrator shall receive a warning tone and be connected to the emergency caller. The disconnected party shall receive a busy signal. Systems which do not provide emergency call interrupt shall not be acceptable.

j. Normal and Urgent calls shall be logged into queue for the designated administrative display phones.

k. Administrative Display Phones shall ring for a period of 30 seconds when they receive a call, and then the call will drop into the que and alert the users with the que alert every 30 seconds until the call is answered / cleared / removed from the Que.

l. Each queue call shall first be sorted according to call priority (emergency calls, then urgent calls, and then normal calls). Calls are sorted within each priority level on a first-in, first-out basis. When a call is answered, it shall automatically be removed from the queue. Systems, which do not sort calls according to priority and order received, shall not be acceptable. 1) The display shall simultaneously show up to four (4) Staff Call Switch Station Calls pending. Additional calls, beyond four (4), shall be indicated by an arrow pointing down thus prompting the user that additional calls are waiting.

m. It shall be possible to answer any incoming call simply by picking up the handset while it is ringing. It shall not be necessary to hit any buttons to answer a call unless the call has dropped into the queue.

n. The Bogen Ceiling Mounted or Wall Baffle VoIP Speakers are powered via Power over Ethernet (PoE). Use an 802.3af compliant Power over Ethernet Switched port. One PoE switched port is required per VoIP Speaker.

26. System programming shall be from an authorized Quantum Commander User via Web browser. All system programming data shall be stored in nonvolatile memory. A valid username and password shall be required to gain access to the following programmable functions:

a. Station Initialization shall be accomplished from an authorized Quantum Commander User via web browser. All station initialization data shall be stored in nonvolatile memory. A password (separate from the password necessary for system programming) shall be required to gain access to the following station initialization parameters:

1. Programming and diagnostics shall be built into the Quantum Commander Webserver browser and be accessible only by authorized personnel. Diagnostics shall indicate passes and failures of system memory, system clock, all audio busses, tone generators, DTMF generators and decoders and the integrity of the field wiring.

2. Systems not capable of supporting web-based diagnostics and any computer interface for programming and diagnostics or supportive of built-in diagnostics for the end user shall not be deemed as equal.

3. Systems that require a serial to Ethernet converter requiring additional software on pc for programming are not deemed as equal.

27. Rollover EOL (End-Of-Line Device)

    a. This feature shall be supported for all the Stations (Admin Display phone or analog phone) configured with a loudspeaker. Based on the dialed sequence, intercom or telephonic call will be connected to the corresponding telephone or speaker.

    b. If a handset station, configured with this feature, is busy when an Admin User calls the station, the call shall be rolled over to the associated speaker. If the speaker is also busy in this case, then the Admin can bump the conversation if enabled in CoS for the admin calling.

    c. Rollover End-of-Line features is only available for the following station types

       Admin Phone and Speaker
       Analog Phone and Speaker
       Handset and Speaker

    d. For calls initiated by a call switch, rollover to the admin speaker shall not happen.

28. Admin Group

    a. This is an Administrative Display Phone feature. This feature shall be programmed from the Commander software. A maximum of 10 Administrative Display Phones will be supported in an Admin Group and there shall be a maximum of 32 Admin Groups per facility.

    b. Once the Admin Group is set:

       1. For normal calls, if the primary Day/Night Admin Phone is busy/no answer, all the phones in the Admin Group shall ring.

       2. For emergency calls, if the primary day/night phone does not answer, all the phones in the Admin Group shall ring.

       3. On no answer from any of the admin phones and if the emergency announce link is configured, the call shall be transferred to the emergency announce link as per the existing procedures. Administrative VoIP Phones do not have the emergency announce link functionality.

       4. On answer from any of the Admin Group Phones, all the other phones shall stop ringing.

29. Call Details Reporting

    a. The details of every call in a facility can be provided in a report by using this feature. Specify the dates, from and to, of calls that you want to include in your log of call details. Then select Get log to view call details on your screen or select Print log to print the log to your printer or to save to file.

b. Call Details Log Screen shows an example of a call log. Calls are listed in the order they were placed. Details for each call include source, target, call type, type (local or VoIP), time call started, time call ended, and call duration (in seconds).

2.05 SPEAKERS

A. Classroom VoIP Wall Baffle Speakers shall be Bogen Model WBS810QIP

B. Wiring shall be done per manufacturer's recommendation, West Penn #357. All terminal connections to be on barrier strips. All cables to be labeled by room.

C. Outdoor horns shall be Bogen FMH15T.

PART 3 - EXECUTION

3.01 EXAMINATION

A. Examine conditions, with the installer present, for compliance with requirements and other conditions affecting the performance of the Integrated Telecommunications/Time/Audio/Media System.

B. Do not proceed until unsatisfactory conditions have been corrected.

3.02 INSTALLATION

A. The installation, adjustment, testing and final connection of all conduit, wiring, boxes, cabinets, etc., shall conform to local electrical requirements and shall be sized and installed in accordance with manufacturer’s approved shop drawings.

B. Low-voltage wiring may be run exposed above ceiling areas where they are easily accessible.

C. Contractor shall install new rack console at location shown on plans.

1. Solder each speaker line splice and tape each individual wire.
2. Connect remote slave clocks to master clock in console.

D. All classroom phones shall be wall-mounted.

1. Mount at 54" AFF.
2. All wiring should be concealed.
3. Verify exact location with Architect.

E. All Administrative Phones shall be desk- or counter-mounted.

1. Provide standard wall 120V AC receptacle 16" AFF
2. Verify exact location with Architect

F. Speaker and telephone lines run above ceiling and not in conduit shall be tie-wrapped to ceiling joist with a maximum spacing of 8' between supports. No wires shall be laid on top of ceiling tile.

G. Connect field cable to each speaker transformer using UL butt splices for 22 AWG wire.

H. Terminate field wiring on wall adjacent to rack using Telco 66 type blocks. Provide neat cross connect system for wiring. Wiring to be labeled to indicate final architectural room number that it services on the Telco block.

I. Rack shall be labeled in numerical order with speaker/phone combinations first, speaker/outside horn combinations last. Labeling and order shall reflect final Architectural room numbers posted outside the rooms. Use three- (3), four- (4), five- (5), or six- (6) digit dialing extensions.

J. Contractor shall provide a minimum of eight (8) hours of operational and programming instruction to school personnel.

K. On the first school day following installation of Multicom System, the Contractor shall provide a technician to standby and assist in system operation.

L. Mark and label all telephone outlets and/or sets with the graphic room numbers. Label all demarks IDF and MDF points with destination point numbers. Rooms with more than one outlet shall be marked XXX-1, XXX-2, XXX-3, etc. where XXX is the room number.

M. No graphic room number shall exceed the sequence from 000001 through 899999.

1. All outside speakers shall be on a separate page zone and time zone.
2. All zones shall be laid out not to exceed 10 watts maximum per zone.
3. All hallway speakers shall be tapped at 1 watt maximum.
4. All outside horns shall be tapped at 3.75 watts maximum.
5. All classroom speakers shall be tapped at ½ watt maximum.
6. Large rooms, such as cafeterias, shall be tapped at 2 watts maximum.

3.03 GROUNDING

A. Provide equipment grounding connections for Integrated Telecommunications/Time/Audio/Media System as indicated. Tighten connections to comply with tightening torques specified in UL Standard 486A to assure permanent and effective grounds.

B. Ground equipment, conductor, and cable shields to eliminate shock hazard and to minimize the greatest extent possible, ground loops, common mode returns, noise pickup, cross talk, and other impairments.

C. The contractor shall provide all necessary transient protection on the AC power feed and on all station lines leaving or entering the building.

D. The contractor shall note in his drawing, the type and locations of these protection devices as well as all wiring information.

E. The contractor shall furnish and install a dedicated, isolated earth ground from the central equipment rack and bond to the incoming electrical service ground buss bar.

PART 4 - EXECUTION

4.01 DIVISION OF WORK

A. While all work included under this specification is the complete responsibility of the contractor, the following division of actual work listed shall occur.

1. The conduit, outlets, terminal cabinets, etc., which form part of the rough-in work shall be furnished and installed completely by the electrical contractor. The balance of the system, including installation of speakers and equipment, making all connections, etc., shall be performed by the manufacturer's authorized representative. The entire responsibility of the system, its operation, function, testing and complete maintenance for one (1) year after final acceptance of the project by the owner, shall also be the responsibility of the manufacturer's authorized representative.

4.02 EQUIPMENT MANUFACTURER'S REPRESENTATIVE

A. All work described herein to be done by the manufacturer's authorized representative shall be provided by a documented factory authorized representative of the basic line of equipment to be utilized.

B. As further qualification for bidding and participating in the work under this specification, the manufacturer's representative shall hold a valid C-10 Contractor's License issued by the Contractor's State License Board of [your state]. The manufacturer's representative shall have completed at least ten (10) projects of equal scope, giving satisfactory performance and have been in the business of furnishing and installing sound systems of this type for at least five (5) years. The manufacturer's representative shall be capable of being bonded to assure the owner of performance and satisfactory service during the guarantee period.

C. The manufacturer's representative shall provide a letter with submittals from the manufacturer of all major equipment stating that the manufacturer's representative is an authorized distributor. This letter shall also state the manufacturer guarantees service performance for the life of the equipment, and that there will always be an authorized distributor assigned to service the area in which the system has been installed.

D. The contractor shall furnish a letter from the manufacturer of the equipment, which certifies that the equipment has been installed according to factory intended practices, that all the

components used in the system are compatible and that all new portions of the systems are operating satisfactorily. Further, the contractor shall furnish a written unconditional guarantee, guaranteeing all parts and all labor for a period of five (5) years after final acceptance of the project by the owner.

4.03 INSTALLATION

A. Plug disconnect: All major equipment components shall be fully pluggable by means of multi-pin receptacles and matching plugs to provide for ease of maintenance and service.

B. Protection of cables: Cables within terminal cabinets, equipment racks, etc., shall be grouped and bundled (harnessed) as to type and laced with No. 12 cord waxed linen lacing twine or T & B "Ty-Rap" cable. Edge protection material shall be installed on edges of holes, lips of ducts or any other point where cables or harnesses cross metallic edge.

C. Cable identification: Cable conductors shall be color-coded and individual cables shall be individually identified. Each cable identification shall have a unique number located approximately 1-1/2" from cable connection at both ends of cable. Numbers shall be approximately 1/4" in height. These unique numbers shall appear on the As-Built Drawings.

D. Shielding: Cable shielding shall be capable of being connected to common ground at point of lowest audio level and shall be free from ground at any other point. Cable shields shall be terminated in same manner as conductors.

E. Provide complete "in service" instructions of system operation to school personnel. Assist in programming of telephone system.

4.04 DOCUMENTATION

Provide the following directly to the Supervisor of Technology Service.

A. Provide a printed copy of all field programming for all components in system.

B. Provide one copy of all diagnostic software with copy of field program for each unit.

C. Provide one copy of all service manuals, parts list, and internal wiring diagrams of each component of system.

D. Provide one copy of all field wiring runs, location and end designation of system.

END OF SECTION 275123

SECTION 283000 - FIRE ALARM SYSTEM

PART 1 – GENERAL

1.1 SCOPE:

A. This specification describes the Fire Detection and Alarm system. The new control panel, shall be intelligent device addressable, analog detecting, low voltage and modular, with digital communication techniques, in full compliance with all applicable codes and standards. The features and capacities described in this specification are required as a minimum for this project and shall be furnished and installed by the Contractor. The system shall be capable of interfacing with the existing campus Mircom FX-2000 fire alarm system.

B. The system shall be in full compliance with National and Local Codes.

C. The system shall include all required hardware, raceways, interconnecting wiring and software to accomplish the requirements of this specification and the contract drawings, whether or not specifically itemized herein.

D. All equipment furnished shall be new and the latest state of the art products of a single manufacturer, engaged in the manufacturing and sale of analog fire detection devices for over ten years.

E. The system as specified shall be supplied, installed, tested and approved by the Local Authority Having Jurisdiction, and turned over to the owner in an operational condition.

F. The layouts shown on the drawings are schematic in nature. Exact system layout shall conform to NFPA-72 and the Contractor shall include all required wiring and devices in his bid.

1.2 RELATED WORK:

The following Sections of the Specifications shall apply to this work:

Division 1	Bidding Requirements and Conditions Of The Contract.	
Division 26	Section 260500	Electrical Material & Methods.
Division 21	Section 211300	Fire Suppression System.
Division 23	Section 230900	Building Temp. Control & Energy Mgmt.
Division 8	Door Hardware.	

1.3 STANDARDS & CODES:

A. The publications listed below form a part of this publication to the extent referenced. The publications are referenced in the text by the basic designation only. The latest version of each listed publication shall be used as a guide unless the Authority Having Jurisdiction has adopted an earlier version.

B. National Fire Protection Association (NFPA) Most current or approved Standard

1. NFPA 13 Standard For The Installation of Sprinkler Systems.
2. NFPA 13A Recommended Practice For The Inspection, Testing And Maintenance of Sprinkler Systems.
3. NFPA 70 National Electrical Code.
4. NFPA 72 National Fire Alarm Code.
5. NFPA 90A Standard For The Installation of Air Conditioning And Ventilating Systems.
6. NFPA 101 Life Safety Code.

C. Underwriters' Laboratories, Inc. (UL) Appropriate “UL” equipment standards.
1. “UL” 864 Control Panels.
2. “UL” 268 Smoke Detectors.
3. “UL” 268A Smoke Detectors (HVAC).
4. “UL” 464 Audible Signal Appliances.
5. “UL” 1971, Standard for Visual Signaling Appliances.

D. Building Codes
1. Standard Building Code and the Standard Fire Code.
2. Uniform Building Code and the Uniform Fire Code.
3. International Building Code and the International Fire Code.
4. NFPA 5000 Building Code.
5. State and Local Building Codes as adopted and/or amended by The Authority Having Jurisdiction.
6. ADA, and/or State and local equivalency standards as adopted by The Authority Having Jurisdiction.

1.4 QUALIFICATIONS OF INSTALLERS

A. Before commencing work, submit data showing that the manufacturer has successfully installed fire alarm systems of the same scope, type and design as specified.

B. The contractor shall submit copies of all required Licenses and Bonds as required in the State having jurisdiction. Contractor shall be licensed by the State of Louisiana Fire Marshall as a Fire Alarm Contactor.

C. Provide the services of a factory trained and certified representative or technician, experienced in the installation and operation of the type of system provided. The representative shall be licensed in the State if required by law. The technician shall supervise installation, software documentation, adjustment, preliminary testing, final testing and certification of the system. The technician shall provide the required instruction to the owner's personnel in the system operation and maintenance.

1.5 SUBMITTALS

A. The contractor shall include the following information in the equipment submittals:
1. Power calculations. Battery capacity calculations. Battery size shall be a minimum of 125% of the calculated requirement.
2. Supervisory power requirements for all equipment.

3. Alarm power requirements for all equipment.
4. Power supply rating justification showing power requirements for each of the system power supplies. Power supplies shall be sized to furnish the total connected load in a worst-case condition plus 25% spare capacity.
5. Voltage drop calculations for Notification circuit wiring runs demonstrating worst-case condition.
6. NAC circuit design shall incorporate a 15% spare capacity for future expansion.
7. Submit manufacturer's requirements for testing Device Loop Card circuits and device addresses prior to connecting to control panel.
8. Complete manufacturers catalog data including supervisory power usage, alarm power usage, physical dimensions, and finish and mounting requirements.
9. Complete drawings covering the following shall be submitted by the contractor for the proposed system:
   a) Floor plans in a CAD compatible format showing all equipment and raceways, marked for size, conductor count with type and size, showing the percentage of allowable National Electric Code used.
   b) Provide a fire alarm system function matrix as referenced by NFPA 72. Matrix shall illustrate alarm input/out events in association with initiation devices. Matrix summary shall include system supervisory and trouble output functions. Include any and all departures, exceptions, variances or substitutions from these specifications and/or drawings at time of bid.
10. Incomplete submittals shall be returned without review.
11. Contractor shall provide all documents required by the State Fire Marshal to review. Documents shall include all calculations and data necessary. These documents shall be sent to the Architect for his forwarding to the State Fire Marshal. This Contractor shall pay all fees associated with the Fire Marshal submittal. No work shall be done until the submittal is approved and returned from the Fire Marshal.

1.6 SYSTEM REQUIREMENTS

A. The system shall be a complete, electrically supervised fire detection and notification system, microprocessor based operating system having the following; capabilities, features and capacities:
   1. Single addressable loop
   2. 252 addressable initiation device capability as a minimum.
   3. Each address shall be capable of supporting one input and one out put, for a total of 504 programmable points on a single loop.
   4. Addressable devices shall be polarity insensitive.
   5. Addressable devices shall operate on "standard wire" no special twist or shield shall be required
   6. 4 notification circuits capable of Style Y (Class B), or 2 notification circuits capable of Style Z (Class A).
   7. Optional relays or LED drivers for graphic annunciation.
   8. Optional Remote annunciator/control panel.
   9. Optional DACT capable of sending point information to a Central Station depending on protocol required by the Central Station.

10. 80-character backlit LCD display with 40 character Customer defined message.
11. Be programmable from system keypad or Laptop computer.

1.7 SYSTEM OPERATION

A. Activation of any manual pull station, smoke detector, heat detector or sprinkler water flow switch shall activate the building notification appliances.
B. Activation of any alarm causing devices shall signal the Central Station to an alarm condition, if the DACT is installed
C. Activation of a supervisory device shall sound an audible and light LED at the control panel to signal a supervisory condition.
D. Activation of a supervisory causing device shall signal the Central Station to a supervisory condition, if the DACT is installed
E. Activation of a trouble shall sound an audible and light an LED at the control panel to signal a trouble condition.
F. Activation of a trouble shall signal the Central Station to a trouble condition, if the DACT is installed.

PART 2 – PRODUCTS

2.1 CONTROL PANEL

A. The control panel shall have digital communications, addressable devices, control points and relays. The system shall have the following;
1. Application specific fire detection
2. Auto configuration, which, reads all addressed devices on the loop and automatically creates a basic general alarm configuration
3. Manual changes without special tools.
4. Windows type software to make configurations easier.
5. Eighty- (80) character backlit LCD display with full system control and up to forty (40) character available for custom message on display.
6. Fully field programmable from the local display or by a PC configuration tool.
7. 2000-event history log.
8. Alarm verification
9. Cross zoning
10. Positive Alarm Sequence
11. Walk test by a single individual in either a silent or audible mode.
12. Maintenance and Technician level with Password protection.
13. Up to 252 addressable initiation devices with the ability for 504 programmable points.
14. Addressable initiating devices shall be polarity insensitive
15. Addressable initiating devices shall operate on standard wire, no special twist or shield shall be required
16. 4 notification circuits capable of Style Y (Class B), or 2 notification circuits capable of Style Z (Class A).
17. Built-in RS-232 port for computer connection

B. The system shall have the ability for programmable form C relays, with contact ratings of 1 amp @ 28 VDC. Each relay module can support up to three (3) relay

boards with each board containing 8 relays for a total of up to 24 relays. For additional relays a relay extender module shall provide up to three (3) relay boards of eight (8) relays each. A maximum of eight (8) relay modules for a total of 192 relays per system can be supported simultaneously within the system.

C. The system shall have the ability to support off site reporting modules within the enclosure and with one of the following modules;
   1. A system DACT shall be supplied with the following;
      a) Support two (2) lines and up to four (4) accounts
      b) Can transmit serial information by point to the Central or Remote Station.
      c) Be capable of transmitting information in the following protocols as a minimum; SIA DCS 8, SIA DCS 20, Ademco Contact ID, 3/1 1400 Hz, 3/1 2300 Hz, 4/2 1400 Hz and 4/2 2300Hz.
   2. A Municipal Tie/Lease Line module shall provide local energy output for municipal call box connection or a reverse polarity output for lease line connection.

D. The local control shall have voice evacuation capabilities integrated into the software, hardware and operating system. The audio capabilities shall be furnished as follows:

1. The audio control modules supplied shall communicate with the fire alarm master via high speed network communications lines.

   a. Provide a microphone, microphone supervision and all required pre-amplifier circuitry.

   b. A backup tone card shall be furnished for the audio control module.

2. The integrated voice system shall utilize local or distributed amplification as required for optimum system performance and configuration.

   a. The voice system amplifiers shall be capable of operating 25 vrms and/or 70 vrms speakers as required to optimize system performance. The amplifiers shall be modular in 100 watt or 30 watt modules as required for system configuration, providing power as required to supply a minimum of 2.0 watts of power for each connected system speaker. Amplifiers shall automatically transfer to standby battery when commercial power fails or is disconnected.

3. The integrated voice system shall be capable of operation of three voice channels simultaneously; Evacuation, Alert and Auxiliary. Systems using a dedicated paging channel shall not be considered equal.

   a. Amplifiers shall be configured for single channel, two channel or 3 channel use to satisfy system operational requirements.

   b. All amplifiers shall be supervised and provide automatic switching to backup amplifier output in the event of amplifier failure.

4. The master microphone module and master telephone shall be permanently mounted behind the locked access door, visible through the viewing window and provide firefighters with the means of issuing voice message instructions to specific audio zones, groups of zones or all zones. The microphone, telephone, and the press-to-talk switches shall be supervised. This module shall contain a local speaker with volume control to monitor selected audio channels.

5. The voice system shall be operable as a voice node on the external voice network composed of up to sixty three self standing network panels, allowing paging to or from other external network nodes as selected in system programming.

    a. The voice network shall be capable of configuration using conventional hard wired techniques or fiber optics transmission systems.

6. Voice digitizer modules shall be furnished as required to satisfy the system operating requirements with the following capacities and capabilities:

    a. Phrase libraries for alarm and alert channels, each storing in excess of 100 phrases which, when linked via software, will comprise evacuation alert and announcement messages of any length required. Additional phrases as required shall be recorded or downloaded using a microphone or tape recorder for use in system messages.

    b. Phrase selection shall be accomplished as a software function of the control panel programming. Systems using separate programming for the voice digitizer shall not be acceptable due to the possibility for programming changes within one or the other creating conflicting messages as an output.

    c. Software control of message generation using phrases from the selected library, duration selectable pauses, tones, and on site recorded phrases as desired. A total of two phrase libraries shall be available on multi-channel systems.

    d. Minimum message capacity shall be 500 messages; 250 evacuation and 250 alert messages. Messages shall be repeatable as selected in software.

    e. Messages shall be selected for distribution to any combination of speaker zones within the system and initiated as a result of any input logic function, time control or software function key.

    f. The digitizer shall support spoken coded operation, allowing the code to be broadcast without the delay and errors inherent in counting pulses on conventional notification appliances.

    g. The voice digitizer shall support a spoken one person walk test, announcing the test and announcing the system address of each device as it is tested, it’s function (alarm, supervisory, trouble), and completing with a confirmation that the test of that device has been completed.

h. Messages shall be delivered in a prioritized order with a minimum of ten priority levels available.

i. Systems requiring external inputs such as relays or solid state switches, jumper or dip switch selection, or custom module inter-wiring shall not be considered acceptable.

7. Furnish supervisory circuitry for amplifiers, speaker circuits and visual circuits in quantities as required by system design. All audible and visual notification circuits shall be power limited.

   a. Furnish for the display of fire sprinkler system status, annunciator modules comprised of eight software programmed LED's, in quantities as required to indicate real time alarm supervisory and trouble status of each system waterflow switch and valve supervisory switch. A valve closure shall cause all waterflow indicators effected by that closure to flash yellow, indicating the lack of water supply for that sprinkler system branch.

2.2 POWER SUPPLY

The power supply shall be capable of 6 amps. A maximum of 3.0 amps available for the NAC circuits. This shall be expanded to 6 amps by adding an additional transformer. The power supply/battery charger shall support up to 38AH battery sets.

2.3 ENCLOSURE

The system enclosure shall be sized to carry all the modules required to meet the specification requirements.

2.4 PRINTER INTERFACE

An interface for a printer shall be provided to allow system events shall be printed.

2.5 REMOTE ANNUNCIATOR

A Remote Annunciator shall provide all the system reporting found on the system annunciator and has the ability to provide, remote acknowledge, silencing, and reset capability secured with a key-switch. The system shall be capable of handling up to sixteen (16) remote annunciators.

2.6 FIELD PROGRAMMING UNIT

A. The programming tool shall program the intelligent devices address. The unit shall test the loop wiring for grounds, opens and shorts. Systems not having this ability shall test all the above items and provide a written report documenting the testing procedure as required in the submittal section.

B. The system programmer shall print labels for all addressable devices and contain the complete SLC circuit and device numbers.

C. Systems that do no meet these requirements will not be accepted.

2.7 ADDRESSABLE INITIATION DEVICES

A. Smoke detectors shall be an intelligent photoelectric detector with thermal element that provides digital communications to the FACP. Detectors shall be listed for use as open area protective coverage, in duct installation and duct sampling assembly installation and shall be insensitive to air velocity changes. Detectors shall be programmable as application specific, selected in software for a minimum of eleven environmental fire profiles unique to the installed location. These fire profiles shall eliminate the possibility of false indications caused by dust, moisture, RFI/EMI, chemical fumes and air movement while factoring in conditions of ambient temperature rise, obscuration rate changes and hot/cold smoke phenomenon into the alarm decision to give the earliest possible real alarm condition report. The detector shall be designed to eliminate calibration errors associated with field cleaning of the chamber. The detector shall support the use of a relay, or LED remote indicator. The detector shall not exceed 2.5 inches of extension below the finish ceiling. Detector wiring shall not require any special cable. Provide (10) ten additional detectors where directed by Engineer. Include approximately 25 feet of wiring, conduit and fittings for each detector.

B. The addressable thermal detector shall be a rate of rise detector rated at 135F.

C. The addressable detector shall be a photo only detector that uses the light scattering principle with a supervised light source and receiver.

D. Detector bases shall be low profile twist lock type with screw clamp terminals and self-wiping contacts. Bases shall be installed on an industry standard, 4" square or octagonal electrical outlet box. Bases shall be supplied with the following features as required for performance to this specification. Select the following bases as required for design operation;
   1. Standard detector base.
   2. Detector relay base with software programmed addressable relay integral to the base.
   3. Detector audible base with software programmed operation of the base audible.

E. Duct Detector, Intelligent shall use one of the photoelectric detectors listed above for the sampling.
   1. The duct detector shall be capable of multi colored LED remote indicator light.
   2. The detector shall be supplied with the appropriate sampling tubes to fit the duct shall be monitored.
   3. Where indicated on drawings provide duct detector with remote relay that shall be operated form the control panel.

F. The manual pull station shall be addressable and semi flush mounted. Where surface mounted is required supply the manufacturers surface mount box. Supply either of the following;
   1. A single action pull station.
   2. A double action pull station.

G. Furnish and install, for the monitoring of contact type initiation devices and for the control of electrical devices where required, intelligent analog signaling circuit interface module. Modules shall be supplied to meet the project requirements as follows:
   1. A single circuit intelligent signaling circuit interface module for monitoring alarm, trouble, supervisory or status contact type devices.
   2. The single circuit interface shall also be available as a freestanding shrink-wrapped unit with pigtail wire leads for direct mounting with contact devices.
   3. A single circuit intelligent signaling circuit interface module for monitoring alarm, trouble, supervisory security or status contact type devices with form C software programmable control contacts for the management of specified electrical loads as required by this specification.
   4. Dual circuit intelligent signaling circuit interface module for monitoring alarm, trouble, supervisory security or status contact type devices.

2.8 NOTIFICATION APPLIANCES

A. The Horn or horn/strobe appliance as indicated on the drawings shall be a synchronized temporal horn with a synchronized strobe light with multiple candela taps to meet the intended application. The appliance shall be red or white as indicated on the drawings. The strobe light taps shall be adjustable for 15/75, 30/75, 75, and 110 candela. The appliance shall be red for wall mounted and white for ceiling mounted. Ceiling mounted appliances shall be rated for that application.

B. The electronic chime or chime/strobe as indicated on the drawings shall be a speaker with a tone card and have adjustable tone and volume capabilities. The chime or chime/strobe shall be adjustable for either single stroke or continuous operation. The chime/strobe shall be available with adjustable strobe intensities of 15/75, 30/75, 75, and 110 candela. The appliance shall be red for wall mounted and white for ceiling mounted. Ceiling mounted appliances shall be rated for that application.

C. The strobe only appliance as indicated on the drawings shall be a synchronized/non-synchronized strobe light with multiple candela taps to meet the intended application. The strobe light taps shall be adjustable for 15/75, 30/75, 75, and 110 candela. The appliance shall be red for wall mounting and white for ceiling mounted. Ceiling mounted appliances shall be rated for that application.

D. An alarm extender panel shall be provided where needed. The power supply shall be a minimum of 6 amps. The power supply shall contain four supervised notification circuits maximum of 3 amps each circuit. The power supply shall contain built-in synchronizing modules for strobes and audibles. There shall be a 3 amp filtered auxiliary power limited output. There shall be a minimum of 8 options PAD-3.

E. Evacuation Signals, Voice Reproducing

(1) Furnish and install where shown on the drawings, voice reproducing audible signals (integral with strobe where noted), with the following characteristics and capacities:

a) Field selectable power taps at 3db increments between .25 and 2 watts and driven at 25vrms or 70.7vrms.

b) Sound output rating of 90db at full power tap.

c) Pressure type screw terminals with capacity to use up to 12AWG wire for speaker connection.

F. Provide (10) ten additional 110Cd speaker/strobes where directed by Engineer. Include approximately 25 feet of wiring, conduit and fittings for each speaker/strobe.

2. 9 ADDITIONAL DEVICES

1. Addressable Modules

a. Addressable monitor modules shall be provided to connect supervised zones to fire alarm control panel SLC loops. There shall be one monitor module for each supervisory switch or alarm switch. Fire pump shall be monitored in accordance with NFPA 72.

b. Addressable control modules shall be provided to supervise and control operation of addressable control points. There shall be one control module for each control point. For fan shutdown, damper closure and other auxiliary control functions, the control module may be set to operate as a dry contact relay.

PART 3 - EXECUTION

3.1 INSTALLATION

A. Perform work in accordance with the requirements of NFPA 70, NFPA 72.

B. Fasten equipment to structural members of building or metal supports attached to structure, or to concrete surfaces.

C. All cable runs shall be run parallel or at right angles to building walls, supported from structure at intervals not exceeding 3 feet and where installed in environmental air plenums, be rated for such use and tied/supported by components listed for environmental air plenums installation.

3.2 BOXES, ENCLOSURES AND WIRING DEVICES

A. Boxes shall be installed plumb and firmly in position.

B. Extension rings with blank covers shall be installed on junction boxes where required.

C. Junction boxes served by concealed conduit shall be flush mounted.

D. Upon initial installation, all wiring outlets, junction, pull and outlet boxes shall have dust covers installed. Dust covers shall not be removed until wiring installation when permanent dust covers or devices are installed.

E. "Fire alarm system" decal or silk-screened label shall be applied to all junction box covers.

3.3 CONDUCTORS

A. Each conductor shall be identified, as shown on the submittal drawings, with wire markers at terminal points. Attach permanent wire markers within 2 inches of the wire termination. Marker legends shall be visible.

B. All wiring shall be supplied and installed in compliance with the requirements of the National Electric Code, NFPA 70, Article 760, and that of the manufacturer.

C. Wiring for Notification Appliance circuits shall be a minimum 14 AWG

D. All splices shall be made using solderless connectors. All connectors shall be installed in conformance with the manufacturer recommendations.

E. Crimp-on type spade lugs shall be used for terminations of stranded conductors to binder screw or stud type terminals. Spade lugs shall have upset legs and insulation sleeves sized for the conductors.

F. Permanently label or mark each conductor at both ends with permanent alphanumeric wire markers.

G. A consistent color code for fire alarm system conductors throughout the installation.

H. The installation contractor shall submit for approval prior to installation of wire, a proposed color code for system conductors to allow rapid identification of circuit types.

I. Wiring within sub panels shall be arranged and routed to allow accessibility to equipment for adjustment and maintenance.

3.4 DEVICES

A. Relays and other devices shall be mounted in auxiliary panels are shall be securely fastened to avoid false indications and failures due to shock or vibration.

B. Wiring within panels shall be arranged and routed to allow accessibility to equipment for adjustment and maintenance.

C. All devices and appliances shall be mounted to or in an approved electrical box.

3.5. CERTIFICATE OF COMPLIANCE

A Certificate of Compliance shall be completed and submitted to the Architect, in accordance with NFPA 72, most current edition, as required by the State Of Louisiana Fire Marshall.

3.6. FIELD QUALITY CONTROL

A. Testing, general
   1. All Alarm Initiating Devices shall be observed and logged for correct zone and sensitivity. These devices and their bases shall be tagged with adhesive tags located in an area not visible when installed, showing the initials of the installing technician and date.
   2. Wiring runs shall be tested for continuity, short circuits and grounds before system is energized. Resistance, current and voltage readings shall be made as work progresses.
   3. The acceptance inspector shall be notified before the start of the required tests. All items found at variance with the drawings or this specification during testing or inspection by the acceptance inspector shall be corrected.
   4. Test reports shall be delivered to the acceptance inspector as completed.
   5. All test equipment, the installing contractor shall make instruments, tools and labor required to conduct the system tests available. The following equipment shall be a minimum for conducting the tests:
      a) Ladders and scaffolds as required to access all installed equipment.
      b) Multi-meter for reading voltage, current and resistance.
      c) Two way radios, and flashlights.
      d) A manufacturer recommended device for measuring airflow through air duct smoke detector sampling assemblies.
      e) Decibel meter.
      f) In addition to the testing specified shall be performed by the installing contractor, the installation shall be subject to test by the acceptance inspector.

3.7 ACCEPTANCE TESTING

A. A written acceptance test procedure (ATP) for testing the fire alarm system components and installation shall be submitted by the Contractor to the Architect and shall be in accordance with NFPA 72 and this specification. The contractor shall be responsible for the performance of the ATP, demonstrating the function of the system and verifying the correct operation of all system components, circuits, and programming.
B. A program matrix shall be prepared by the installing contractor referencing each alarm input to every output function affected as a result of an alarm condition on that input.
C. The installing contractor prior to the ATP shall prepare a complete listing of all device labels for alphanumeric annunciator displays.
D. The acceptance inspector shall use the system record drawings in combination with the documents specified in this specification during the testing procedure to verify operation as programmed. In conducting the ATP, the acceptance

inspector shall request demonstration of any or all input and output functions. The items tested shall include but not be limited to the following:

1. System wiring shall be tested to demonstrate correct system response and correct subsequent system operation in the event of:
   a) Open, shorted and grounded signal line circuits.
   b) Open, shorted and grounded notification circuits.
   c) Primary power or battery disconnected.
2. System notification appliances shall be demonstrated as follows:
   a) All alarm notification appliances actuate as programmed
   b) Audibility and visibility at required levels.
3. System indications shall be demonstrated as follows:
   a) Correct message display for each alarm input at the control display.
   b) Correct annunciator light for each alarm input at each annunciator and graphic display as shown on the drawings.
   c) Correct history logging for all system activity.
4. System off-site reporting functions shall be demonstrated as follows:
   a) Correct point transmitted for each alarm input
   b) Trouble signals received for disconnect
5. Secondary power capabilities shall be demonstrated as follows:
   a) System primary power shall be disconnected for a period of time as specified herein. At the end of that period, an alarm condition shall be created and the system shall perform as specified for a period as specified.
   b) System primary power shall be restored for forty-eight hours and system-charging current shall be normal trickle charge for a fully charged battery bank.
   c) System battery voltages and charging currents shall be checked at the fire alarm control panel

3.8 DOCUMENTATION

A. System documentation shall be furnished to the owner and shall include but not be limited to the following:
   1. System record drawings and wiring details including one set of reproducible masters and drawings on a CD ROM in a DXF format suitable for use in a CAD drafting program.
   2. System operation, installation and maintenance manuals.
   3. System matrix showing interaction of all input signals with output commands.
   4. Documentation of system voltage, current and resistance readings taken during the installation, testing and ATP phases of the system installation.
   5. System program showing system functions, controls and labeling of equipment and devices.

3.9 SERVICES

A. The contractor shall warrant the entire system against mechanical and electrical defects for a period described in the contract general conditions.

B. The fire alarm system subcontractor shall offer, for the owner's consideration at

the time of system submittal, a priced inspection, maintenance, testing and repair contract in full compliance with the requirements of NFPA 72. The owner shall have the option of renewing at the price quoted for single or multiple years up to five years.

C. The contractor performing the contract services shall be qualified and listed to maintain ongoing certification of the completed system to the UL for specific installed system listing.

D. The installation contractor shall furnish training as follows for a minimum of four employees of the system user:
   1. Training in the receipt, handling and acknowledgment of alarms.
   2. Training in the system operation including manual control of output functions from the system control panel.
   3. Training in the testing of the system including logging of detector sensitivity, field test of devices and response to common troubles.
   4. The total training requirement shall be a minimum of 2 hours, but shall be sufficient to cover all items specified.

END OF SECTION 283000

SECTION 31 10 00 - SITE CLEARING

PART 1 - GENERAL

1.1 SUMMARY

A. Site clearing is required for areas on the property indicated to receive new pavement construction. This Section includes the following:
   1. Protecting existing vegetation to remain.
   2. Removing existing vegetation.
   3. Clearing and grubbing.
   4. Stripping and stockpiling topsoil.
   5. Temporary erosion- and sedimentation-control measures.

1.2 DEFINITIONS

A. Subsoil: All soil beneath the topsoil layer of the soil profile, and typified by the lack of organic matter and soil organisms.

B. Surface Soil: Soil that is present at the top layer of the existing soil profile at the Project site. In undisturbed areas, the surface soil is typically topsoil; but in disturbed areas such as urban environments, the surface soil can be subsoil.

C. Topsoil: Natural or cultivated surface-soil layer containing organic matter and sand, silt, and clay particles; friable, pervious, and black or a darker shade of brown, gray, or red than underlying subsoil; reasonably free of subsoil, clay lumps, gravel, and other objects more than 2 inches (50 mm) in diameter; and free of weeds, roots, and other deleterious materials.

D. Plant-Protection Zone: Area surrounding individual trees, groups of trees, shrubs, or other vegetation to be protected during construction, and indicated on Drawings.

E. Tree-Protection Zone: Area surrounding individual trees or groups of trees to be protected during construction, and [indicated on Drawings] [defined by a circle concentric with each tree with a radius 1.5 times the diameter of the drip line unless otherwise indicated] <Insert requirement>.

F. Vegetation: Trees, shrubs, groundcovers, grass, and other plants.

1.3 MATERIALS OWNERSHIP

A. Cleared materials shall become Contractor's property and shall be removed from the site.

1.4 PROJECT CONDITIONS

A. Traffic: Minimize interference with adjoining roads, streets, walks, and other adjacent occupied or used facilities during site-clearing operations.

1. Do not close or obstruct streets, walks, or other adjacent occupied or used facilities without permission from Owner and authorities having jurisdiction.
2. Provide alternate routes around closed or obstructed traffic ways if required by authorities having jurisdiction.

B. Utility Locator Service: LA One Call for area where Project is located before site clearing.

C. Do not commence site clearing operations until temporary erosion and sedimentation-control and plant-protection measures are in place.

D. The following practices are prohibited within protection zones:
1. Storage of construction materials, debris, or excavated material.
2. Parking vehicles or equipment.
3. Foot traffic.
4. Erection of sheds or structures.
5. Impoundment of water.
6. Excavation or other digging unless otherwise indicated.
7. Attachment of signs to or wrapping materials around trees or plants unless otherwise indicated.

E. Do not direct vehicle or equipment exhaust towards protection zones.

F. Prohibit heat sources, flames, ignition sources, and smoking within or near protection zones.

G. Soil Stripping, Handling, and Stockpiling: Perform only when the topsoil is dry or slightly moist.

PART 2 - PRODUCTS (Not Applicable)

PART 3 - EXECUTION

3.1 PREPARATION

A. Protect and maintain benchmarks and survey control points from disturbance during construction.

B. Provide erosion-control measures to prevent soil erosion and discharge of soil-bearing water runoff or airborne dust to adjacent properties and walkways.

C. Locate and clearly flag trees and vegetation to remain.

D. Protect existing site improvements to remain from damage during construction.
1. Restore damaged improvements to their original condition, as acceptable to Owner.

3.2 TEMPORARY EROSION AND SEDIMENTATION CONTROL

A. Provide temporary erosion- and sedimentation-control measures to prevent soil erosion and discharge of soil-bearing water runoff or airborne dust to adjacent properties and walkways, according to erosion- and sedimentation-control Drawings and requirements of authorities having jurisdiction.

B. Verify that flows of water redirected from construction areas or generated by construction activity do not enter or cross protection zones.

C. Inspect, maintain, and repair erosion- and sedimentation-control measures during construction until permanent vegetation has been established.

D. Remove erosion and sedimentation controls and restore and stabilize areas disturbed during removal.

3.3 TREE PROTECTION

A. Do not store construction materials, debris, or excavated material within drip line of remaining trees.

B. Do not permit vehicles, equipment, or foot traffic within drip line of remaining trees.

C. Do not excavate within drip line of trees to remain, unless otherwise indicated.

D. Repair or replace trees and vegetation indicated to remain that are damaged by construction operations, in a manner approved by Architect.

3.4 UTILITIES

A. Existing Utilities: Do not interrupt utilities serving facilities occupied by others unless permitted under the following conditions and then only after arranging to provide temporary utility services according to requirements indicated.

3.5 REMOVAL, CLEARING AND GRUBBING

A. Remove obstructions, trees, shrubs, grass, and other vegetation to permit installation of new construction. Tree removal includes completed removal of root systems. Removal includes digging out stumps and obstructions and grubbing roots.
   1. Do not remove trees, shrubs, and other vegetation indicated to remain or to be relocated.
   2. Cut minor roots and branches of trees indicated to remain in a clean and careful manner where such roots and branches obstruct installation of new construction.
   3. Completely remove stumps, roots, obstructions, and debris extending to a depth of 18 inches (450 mm) below exposed subgrade.
   4. Use only hand methods for grubbing within drip line of remaining trees.

B. Fill depressions caused by clearing and grubbing operations with satisfactory soil material, unless further excavation or earthwork is indicated.

1. Place fill material in horizontal layers not exceeding 8-inch (200-mm) loose depth, and compact each layer to a density equal to adjacent original ground.
2. Comply with fill and backfill requirements specified Division 31 Section Earthwork.

3.6 TOPSOIL STRIPPING

A. Remove sod and grass before stripping topsoil.

B. Strip topsoil to whatever depths are encountered in a manner to prevent intermingling with underlying subsoil or other waste materials. Remove a minimum of 8-inches of topsoil.
   1. Strip surface soil of unsuitable topsoil, including trash, debris, weeds, roots, and other waste materials.

C. Stockpile topsoil away from edge of excavations without intermixing with subsoil. Grade and shape stockpiles to drain surface water. Cover to prevent windblown dust and erosion by water.
   1. Limit height of topsoil stockpiles to 72 inches.
   2. Do not stockpile topsoil within protection zones.
   3. Dispose of surplus topsoil. Surplus topsoil is that which exceeds quantity indicated to be stockpiled or reused.
   4. Stockpile surplus topsoil to allow for re-spreading deeper topsoil.

3.7 DISPOSAL

A. Disposal: Remove surplus soil material, unsuitable topsoil, obstructions, demolished materials, and waste materials, including trash and debris, and legally dispose of them off Owner's property.

END OF SECTION 31 10 00

SECTION 31 23 00 - EARTHWORK

PART 1 - GENERAL

1.1 SUMMARY

A. This Section includes the following:
   1. Preparing subgrades for pavements.
   2. Sub-base course for concrete pavements.

1.2 DEFINITIONS

A. Backfill: Soil material or controlled low-strength material used to fill an excavation.

B. Borrow Soil: Satisfactory soil imported from off-site for use as fill or backfill.

C. Excavation: Removal of material encountered above subgrade elevations and to lines and dimensions indicated.
   1. Authorized Additional Excavation: Excavation below subgrade elevations or beyond indicated lines and dimensions as directed by Architect. Authorized additional excavation and replacement material will be paid for according to Contract provisions for changes in the Work.
   2. Unauthorized Excavation: Excavation below subgrade elevations or beyond indicated lines and dimensions without direction by Architect. Unauthorized excavation, as well as remedial work directed by Architect, shall be without additional compensation.

D. Fill: Soil materials used to raise existing grades.

E. Structures: Buildings, footings, foundations, slabs, curbs, mechanical and electrical appurtenances, or other man-made stationary features constructed above or below the ground surface.

F. Subbase Course: Course placed between the subgrade and concrete pavement.

G. Subgrade: Surface or elevation remaining after completing excavation, or top surface of a fill or backfill immediately below subbase, drainage fill, or topsoil materials. The undisturbed earth after excavation and removal of topsoil, and deleterious materials.

H. Utilities: On-site underground pipes, conduits, ducts, and cables, as well as underground services.

1.3 SUBMITTALS

A. Material Test Reports: Coordinate with testing agency to perform and interpret test results for compliance of the following with requirements indicated:
   1. Classification according to ASTM D 2487 of each on-site and borrow soil material proposed for fill and backfill.

2. Laboratory compaction curve according to ASTM D 698 for each on-site and borrow soil material proposed for fill and backfill.

B. Geotechnical Testing Agency: Submit proposed testing agency for observing proofrolling and performing specified testing requirements.

1.4 QUALITY ASSURANCE

A. Geotechnical Testing Agency Qualifications: An independent testing agency qualified according to ASTM E 329 to conduct soil materials testing, as documented according to ASTM D 3740 and ASTM E 548.
   1. Testing: Payment for testing services.
      a. Owner will pay for and employ a testing agency for field testing for compaction of fill on site.
      b. Contractor shall pay for testing of imported fill, to demonstrate that imported fill meets project requirements.

1.5 PROJECT CONDITIONS

A. Existing Buried Utilities: Before beginning excavation and related work, notify Louisiana One Call at 1-800-272-3020, in advance to mark and locate buried utilities, communications cables and other underground items. Verify exact locations of these items by hand or carefully excavating to avoid damage to these buried items.

B. Existing Utilities: Do not interrupt utilities serving surrounding facilities occupied unless permitted in advance and in writing and then only after arranging to provide temporary utility services according to requirements indicated.
   1. Do not proceed with utility interruptions without written permission.

PART 2 - PRODUCTS

2.1 SOIL MATERIALS

A. General: Provide imported soil materials when sufficient satisfactory soil materials are not available from on site excavations.

B. On-Site Fill Material:
   1. Surface Material Containing Organic Material: Use only for topsoil backfill for lawn areas. Do not use for backfilling anywhere else.
   2. Subsurface Material: Use only if it meets the requirements of imported fill material.
   3. Excess material shall be removed form the site and disposed of legally.

C. Engineered (Structural) Fill: Fill material free of organic and deleterious materials, maximum particle size less than 2-inches, Liquid Limit less than 40 and plasticity index greater than 10 but not more than 22. Cohesive fill, sandy lean clays; CL classification.

D. Subbase Course Material: Sand, as described below.

E. Sand: ASTM C 33; fine aggregate, natural, or manufactured sand.

2.2 GEOTEXTILES

A. Filter Fabric: Products by Reemay Inc., Hoechst Celanese Corp., Phillips Fibers or approved equal. Grade and type recommended by filter fabric manufacturer for type of soil encountered.

2.3 ACCESSORIES

A. Other materials, not specifically described but required for proper completion of the work of this Section, shall be as selected by the Contractor subject to the approval of the Architect.

PART 3 - EXECUTION

3.1 PREPARATION

A. Protect structures, utilities, sidewalks, pavements, landscaping, and other facilities from damage caused by settlement, lateral movement, undermining, washout, and other hazards created by earthwork operations.

B. Protect and maintain erosion and sedimentation controls during earthwork operations.

3.2 DEWATERING

A. Prevent surface water and ground water from entering excavations, from ponding on prepared subgrades, and from flooding Project site and surrounding area.

B. Protect subgrades from softening, undermining, washout, and damage by rain or water accumulation.
   1. Reroute surface water runoff away from excavated areas. Do not allow water to accumulate in excavations.
   2. Install a dewatering system to keep subgrades dry and convey ground water away from excavations. Maintain until dewatering is no longer required.

3.3 EXPLOSIVES

A. Explosives: Do not use explosives.

3.4 EXCAVATION FOR PAVEMENTS

A. Excavate surfaces under pavements to required elevations for receiving new pavements.

B. When excessive moisture is encountered, comply with SOIL MOISTURE CONTROL provisions below.

3.5 SUBGRADE INSPECTION - APPROVAL OF SUBGRADE

A. Testing and Inspection is required for areas under pavements.

B. Notify Testing Agency and Architect when excavations have reached required subgrade.

C. If Testing Agency determines that unsatisfactory soil is present, continue excavation and replace with compacted backfill or fill material as directed.

D. Excavate unsatisfactory soils as determined by Testing Agency and Architect, and replace with compacted backfill or fill as directed.

E. Authorized additional excavation and replacement material will be paid for according to Contract provisions for changes in the Work.

F. Do not proceed with backfill operations until the subgrade has passed observations and has met compaction requirements. Obtain Architect's approval before proceeding.

G. Reconstruct subgrades damaged by freezing temperatures, frost, rain, accumulated water, or construction activities, as directed by Architect, without additional compensation.

3.6 UNAUTHORIZED EXCAVATION

A. Fill unauthorized excavation by extending bottom elevation of pavements, without altering top elevation. Lean concrete fill, with 28-day compressive strength of 2,500 psi (17.2 MPa), may be used when approved by Architect.

3.7 STORAGE OF SOIL MATERIALS

A. Stockpile borrow soil materials and excavated satisfactory soil materials without intermixing. Place, grade, and shape stockpiles to drain surface water. Cover to prevent windblown dust.
   1. Stockpile soil materials away from edge of excavations. Do not store within drip line of remaining trees.

3.8 BACKFILL

A. Place and compact backfill in excavations promptly, but not before completing the following:
   1. Removing concrete formwork.
   2. Removing trash and debris.
   3. Removing temporary shoring and bracing, and sheeting.
   4. Installing permanent or temporary horizontal bracing on horizontally supported walls.

B. Place backfill on subgrades free of mud, frost, snow, or ice.

3.9 SOIL FILL

A. Place and compact fill material in layers to required elevations as follows:
   1. Under grass and planted areas, use satisfactory soil material.
   2. Under pavements, use satisfactory soil material.

B. Place soil fill on subgrades free of mud, frost, snow, or ice.

3.10 SOIL MOISTURE CONTROL

A. Uniformly moisten or aerate subgrade and each subsequent fill or backfill soil layer before compaction to within 2 percent of optimum moisture content.
   1. Do not place backfill or fill soil material on surfaces that are muddy, frozen, or contain frost or ice.
   2. Remove and replace, or scarify and air dry otherwise satisfactory soil material that exceeds optimum moisture content by 2 percent and is too wet to compact to specified dry unit weight.
   3. If there is excessive moisture, such as in clay or silts causing pumping under the loadings of the compaction equipment, mix and cut in about 5% by weight of lime or fly ash to attain optimum moisture contact and to achieve required compaction.

3.11 COMPACTION OF SOIL BACKFILLS AND FILLS

A. Place backfill and fill soil materials in layers not more than 8 inches (200 mm) in loose depth for material compacted by heavy compaction equipment, and not more than 4 inches (100 mm) in loose depth for material compacted by hand-operated tampers.

B. Place backfill and fill soil materials evenly on all sides of structures to required elevations, and uniformly along the full length of each structure.

C. Compact soil materials to not less than 95 percent of the material's standard Proctor maximum density according to ASTM D 698, Standard Proctor.

3.12 GRADING

A. General: Uniformly grade areas to a smooth surface, free of irregular surface changes. Comply with compaction requirements and grade to cross sections, lines, and elevations indicated.
   1. Provide a smooth transition between adjacent existing grades and new grades.
   2. Cut out soft spots, fill low spots, and trim high spots to comply with required surface tolerances.

B. Site Grading: Slope grades to direct water away from buildings and to prevent ponding. Finish subgrades to required elevations within the following tolerances:
   1. Lawn or Unpaved Areas: Plus or minus 1 inch (25 mm).
   2. Pavements: Plus or minus 1/2 inch (13 mm).

3.13 SUBBASE AND BASE COURSES

A. Place subbase and base course on subgrades free of mud, frost, snow, or ice.

B. On prepared subgrade, place subbase and base course under pavements as follows:
   1. Shape subbase and base course to required elevations and cross-slope grades.
   2. Place subbase and base course 6 inches (150 mm) or less in compacted thickness in a single layer.

3. Place subbase and base course that exceeds 6 inches (150 mm) in compacted thickness in layers of equal thickness, with no compacted layer more than 6 inches (150 mm) thick or less than 3 inches (75 mm) thick.
4. Compact subbase and base course at optimum moisture content to required grades, lines, cross sections, and thickness to not less than 95 percent of maximum dry unit weight according to ASTM D 698.

3.14 FIELD QUALITY CONTROL

A. Testing Agency: Owner may engage and pay for a qualified independent geotechnical engineering testing agency to perform field quality-control testing.

B. Subgrade and Subbase Inspections: Allow testing agency to inspect and test subgrades and each fill or backfill layer. Proceed with subsequent earthwork only after test results for previously completed work comply with requirements.

C. Testing agency will test compaction of soils in place according to ASTM D 1556, ASTM D 2167, ASTM D 2922, and ASTM D 2937, as applicable. Tests will be performed at the following locations and frequencies:
1. Paved Areas: At subgrade and at each compacted fill and backfill layer, at least 1 test for every 2,000 sq. ft. (186 sq. m) or less of paved area or building slab, but in no case fewer than 3 tests.

D. When testing agency reports that subgrades, fills, or backfills have not achieved degree of compaction specified, scarify and moisten or aerate, or remove and replace soil to depth required; recompact and retest until specified compaction is obtained.

3.15 PROTECTION

A. Protecting Graded Areas: Protect newly graded areas from traffic, freezing, and erosion. Keep free of trash and debris.

B. Repair and re-establish grades to specified tolerances where completed or partially completed surfaces become eroded, rutted, settled, or where they lose compaction due to subsequent construction operations or weather conditions.
1. Scarify or remove and replace soil material to depth as directed by Architect; reshape and re-compact.

C. Where settling occurs before Project correction period elapses, remove finished surfacing, backfill with additional soil material, compact, and reconstruct surfacing.
1. Restore appearance, quality, and condition of finished surfacing to match adjacent work, and eliminate evidence of restoration to greatest extent possible.

3.16 DISPOSAL OF SURPLUS AND WASTE MATERIALS

A. Disposal: Remove surplus satisfactory soil and waste material, including unsatisfactory soil, trash, and debris, and legally dispose of it off Owner's property.

END OF SECTION 31 23 00

SECTION 32 13 00 - CONCRETE PAVEMENT

PART 1 - GENERAL

1.1 SUMMARY

A. This Section includes exterior cement concrete pavement, pavement joint sealants, and related accessories.

B. Related Sections
   1. Division 31 Section, Earthwork.

1.2 SUBMITTALS

A. Concrete Design Mixtures: Submit for approval.

1.3 QUALITY ASSURANCE

A. Testing Agency Qualifications: Qualified according to ASTM C 1077 and ASTM E 329 for testing indicated.

B. Concrete Testing Service: Owner will pay for and engage a qualified testing agency to perform material evaluation tests and to design concrete mixtures.

C. ACI Publications: Comply with ACI 301 (ACI 301M) unless otherwise indicated.

D. Source Limitations: Obtain each type or class of cementitious material of the same brand from the same manufacturer's plant and each aggregate from one source.

1.4 PROJECT CONDITIONS

A. Traffic Control: Maintain access for vehicular and pedestrian traffic as required for other construction activities.

PART 2 - PRODUCTS

2.1 FORMS

A. Form Materials: Plywood, metal, metal-framed plywood, or other approved panel-type materials to provide full-depth, continuous, straight, and smooth exposed surfaces.

B. Form-Release Agent: Commercially formulated form-release agent.

2.2 STEEL REINFORCEMENT

A. Plain-Steel Welded Wire Reinforcement: ASTM A 185/A 185M, fabricated from galvanized-steel wire into flat sheets.

B. Deformed-Steel Welded Wire Reinforcement: ASTM A 497/A 497M, flat sheet.

C. Reinforcing Bars: ASTM A 615/A 615M, Grade 60 (Grade 420); deformed.

D. Plain-Steel Wire: ASTM A 82/A 82M, galvanized.

E. Joint Dowel Bars: ASTM A 615/A 615M, Grade 60 (Grade 420) plain-steel bars; zinc coated (galvanized) after fabrication according to ASTM A 767/A 767M, Class I coating. Cut bars true to length, with ends square and free of burrs.

F. Bar Supports: Bolsters, chairs, spacers, and other devices for spacing, supporting, and fastening reinforcing bars, welded wire reinforcement, and dowels in place. Manufacture bar supports according to CRSI's "Manual of Standard Practice" from steel wire, plastic, or precast concrete of greater compressive strength than concrete specified, and as follows:
   1. Equip wire bar supports with sand plates or horizontal runners where base material will not support chair legs.

2.3 CONCRETE MATERIALS

A. Portland Cement: ASTM C 150, Type I or II.
   1. Use the same brand and type of cementitious material from the same manufacturer throughout the Project.
   2. Fly Ash and Slag: Not permitted.

B. Aggregate: ASTM C 33, uniformly graded, from a single source.
   1. Maximum Aggregate Size: 3/4 inch (19 mm) nominal.
   2. Do not use fine or coarse aggregates containing substances that cause spalling.

C. Water: Potable and complying with ASTM C 94/C 94M.

D. Air-Entraining Admixture: ASTM C 260.

E. Chemical Admixtures: Admixtures certified by manufacturer to be compatible with other admixtures and to contain not more than 0.1 percent water-soluble chloride ions by mass of cementitious material.
   1. Water-Reducing Admixture: ASTM C 494/C 494M, Type A.
   2. Retarding Admixture: ASTM C 494/C 494M, Type B.
   3. Water-Reducing and Retarding Admixture: ASTM C 494/C 494M, Type D.
   4. High-Range, Water-Reducing Admixture: ASTM C 494/C 494M, Type F.
   5. High-Range, Water-Reducing and Retarding Admixture: ASTM C 494/C 494M, Type G.
   6. Plasticizing and Retarding Admixture: ASTM C 1017/C 1017M, Type II.

2.4 CURING MATERIALS

A. Clear, Waterborne, Membrane-Forming Curing Compound: ASTM C 309, Type 1, Class B, dissipating.

2.5 JOINT MATERIALS

A. Joint Filler: UV and weather-resistant, polyethylene closed-cell strip material, 1/2 inch (13 mm) thick. Depth required to extend thickness of pavement material. Sonoflex F by Sonneborn, or approved equal.

B. Sealant and Accessories: One-part self leveling polyurethane, Sonolastic SL-1 by Sonneborn, Urexpan NR-201 by Pecora, or approved equal. Include sealant manufacturer's recommended accessories such as primer, backer rod, bond breaker, etc.

C. Metal Keyways: 26 gage (0.5 mm) galvanized steel. Preformed.

D. Joint Dowel Bars: Plain steel bars, ASTM A 615, Grade 60.

E. Expansion Caps: PVC or metal caps. Furnish for one end of each dowel bar in expansion joints. Design caps with one end closed and a minimum length of 3" (76 mm) to allow bar movement of not less than 1" (25 mm), unless otherwise indicated.

2.6 CONCRETE MIXTURES

A. Prepare design mixtures, proportioned according to ACI 301 (ACI 301M), for each type and strength of normal-weight concrete, and as determined by either laboratory trial mixtures or field experience.
   1. Use a qualified independent testing agency for preparing and reporting proposed concrete design mixtures for the trial batch method.

B. Proportion mixtures to provide normal-weight concrete with the following properties:
   1. Compressive Strength (28 Days): 4,000 psi, unless indicated otherwise.
   2. Maximum Water-Cementitious Materials Ratio at Point of Placement: 0.45.
   3. Slump Limit: 5 inches (125 mm).

C. Add air-entraining admixture at manufacturer's prescribed rate to result in concrete at point of placement having an air content of 2.5 to 4.5 percent.

D. Chemical Admixtures: Use admixtures according to manufacturer's written instructions.
   1. Use water-reducing admixture in concrete, as required, for placement and workability.
   2. Use water-reducing and retarding admixture when required by high temperatures, low humidity, or other adverse placement conditions.

2.7 CONCRETE MIXING

A. Ready-Mixed Concrete: Measure, batch, and mix concrete materials and concrete according to ASTM C 94/C 94M. Furnish batch certificates for each batch discharged and used in the Work.
   1. When air temperature is between 85 and 90 deg F (30 and 32 deg C), reduce mixing and delivery time from 1-1/2 hours to 75 minutes; when air temperature is above 90 deg F (32 deg C), reduce mixing and delivery time to 60 minutes.

PART 3 - EXECUTION

3.1 EXAMINATION

A. Examine exposed subgrades and subbase surfaces for compliance with requirements for dimensional, grading, and elevation tolerances.

B. Comply with preparing subbase, fill and compaction requirements for surface below concrete paving as described in Division 31 Earthwork section.

3.2 PREPARATION

A. Remove loose material from compacted subbase surface immediately before placing concrete.

3.3 EDGE FORMS AND SCREED CONSTRUCTION

A. Set, brace, and secure edge forms, bulkheads, and intermediate screed guides for pavement to required lines, grades, and elevations. Install forms to allow continuous progress of work and so forms can remain in place at least 24 hours after concrete placement.

B. Clean forms after each use and coat with form-release agent to ensure separation from concrete without damage.

3.4 STEEL REINFORCEMENT

A. General: Comply with CRSI's "Manual of Standard Practice" for fabricating, placing, and supporting reinforcement.

B. Clean reinforcement of loose rust and mill scale, earth, ice, or other bond-reducing materials.

C. Arrange, space, and securely tie bars and bar supports to hold reinforcement in position during concrete placement. Maintain minimum cover to reinforcement.

D. Install welded wire reinforcement in lengths as long as practicable. Lap adjoining pieces at least one full mesh, and lace splices with wire. Offset laps of adjoining widths to prevent continuous laps in either direction.

E. Interrupt reinforcement at joints.

3.5 JOINTS

A. General: Form construction, isolation, and contraction joints and tool edgings true to line with faces perpendicular to surface plane of concrete. Construct transverse joints at right angles to centerline, unless otherwise indicated.
   1. When joining existing pavement, place transverse joints to align with previously placed joints, unless otherwise indicated.
   2. Vehicular Paving: Unless indicated otherwise -

a. Expansion joints at not more than 60 feet (16.4 m).
b. Dummy or control joints at not more than 20 feet (9 m).

3. Pedestrian Walkway Paving: Unless indicated otherwise -
   a. Expansion joints at not more than 40 feet (12.2 m).
   b. Dummy or control joints at not more than 5 feet (1.5 m).

B. Construction Joints: Set construction joints at side and end terminations of pavement and at locations where pavement operations are stopped for more than one-half hour unless pavement terminates at isolation joints.
   1. Continue steel reinforcement across construction joints, unless otherwise indicated. Do not continue reinforcement through sides of pavement strips, unless otherwise indicated.
   2. Provide tie bars at sides of pavement strips where indicated.
   3. Butt Joints: Use bonding agent at joint locations where fresh concrete is placed against hardened or partially hardened concrete surfaces.
   4. Keyed Joints: Provide preformed keyway-section forms or bulkhead forms with keys, unless otherwise indicated. Embed keys at least 1-1/2 inches (38 mm) into concrete.
   5. Lubricate or asphalt-coat one-half of dowel length to prevent concrete bonding to one side of joint.

C. Isolation Joints: Form isolation joints of preformed joint-filler strips abutting existing concrete, catch basins, manholes, structures, walks, other fixed objects.

D. Expansion Joints: Provide pre-molded joint filler for expansion joints abutting concrete curbs, catch basins, manholes, inlets, structures, walks and other fixed objects, unless otherwise indicated. Install load transfer-slip dowel devices as indicated. Extend joint fillers full-width and depth of joint, and not less than 1/2-inch (13 mm) or more than 1-inch (25 mm) below finished surface where joint sealer is indicated. If no joint sealer, place top of joint filler flush with finished concrete surface. Furnish joint fillers in one-piece lengths for full width being placed, wherever possible. Where more than one length is required, lace or clip joint filler sections together. Protect top edge of joint filler during concrete placement with a metal cap or other temporary material. Remove protection after concrete has been placed on both sides of joint.

E. Place expansion joints to align with existing joints and where indicated.

F. Place joint filler between paving components and building or other appurtenances.

G. Fillers and Sealants: Install continuous sealant beads at paving joints. Clean and prepare joints for sealant application after concrete had cured sufficiently. Prime joint surfaces, install backer rod and bond breaker and other items as recommended by sealant manufacturer. Install sealant in accordance with manufacturer's instructions.

H. Edging: Tool edges of pavements in concrete after initial floating with an edging tool to a 1/4-inch (6-mm) radius. Repeat tooling of edges after applying surface finishes. Eliminate tool marks on concrete surfaces.

I. Install dowel bars and support assemblies at expansion joints, and where indicated. Lubricate or asphalt-coat one-half of dowel length to prevent concrete bonding to one side of joint.

3.6 CONCRETE PLACEMENT

A. Inspection: Before placing concrete, inspect and complete formwork installation, steel reinforcement, and items to be embedded or cast in. Notify other trades to permit installation of their work.

B. Remove snow, ice, or frost from subbase surface and reinforcement before placing concrete. Do not place concrete on frozen surfaces.

C. Moisten subbase to provide a uniform dampened condition at time concrete is placed. Do not place concrete around manholes or other structures until they are at required finish elevation and alignment.

D. Comply with ACI 301 requirements for measuring, mixing, transporting, and placing concrete.

E. Do not add water to fresh concrete after testing.

F. Deposit and spread concrete in a continuous operation between transverse joints. Do not push or drag concrete into place or use vibrators to move concrete into place.

G. Consolidate concrete according to ACI 301 by mechanical vibrating equipment supplemented by hand spading, rodding, or tamping.
   1. Consolidate concrete along face of forms and adjacent to transverse joints with an internal vibrator. Keep vibrator away from joint assemblies, reinforcement, or side forms. Use only square-faced shovels for hand spreading and consolidation. Consolidate with care to prevent dislocating reinforcement, dowels, and joint devices.

H. Screed pavement surfaces with a straightedge and strike off.

I. Commence initial floating using bull floats or darbies to impart an open textured and uniform surface plane before excess moisture or bleed water appears on the surface. Do not further disturb concrete surfaces before beginning finishing operations or spreading surface treatments.

J. When adjoining pavement lanes are placed in separate pours, do not operate equipment on concrete until pavement has attained 85 percent of its 28-day compressive strength.

K. Hot-Weather Placement: Place concrete according to recommendations in ACI 305R and as follows when hot-weather conditions exist:
   1. Cool ingredients before mixing to maintain concrete temperature at time of placement below 90 ^{0}F (32 C). Chilled mixing water or chopped ice may be used to control temperature, provided water equivalent of ice is calculated to total amount of mixing water. Using liquid nitrogen to cool concrete is Contractor's option.

2. Cover reinforcement steel with water-soaked burlap so steel temperature will not exceed ambient air temperature immediately before embedding in concrete.
3. Fog-spray forms, reinforcement steel, and subgrade just before placing concrete. Keep subgrade moisture uniform without standing water, soft spots, or dry areas.

3.7 CONCRETE FINISHING

A. General: Do not add water to concrete surfaces during finishing operations.

B. Float Finish: Begin the second floating operation when bleed-water sheen has disappeared and concrete surface has stiffened sufficiently to permit operations. Float surface with power-driven floats, or by hand floating if area is small or inaccessible to power units. Finish surfaces to true planes. Cut down high spots and fill low spots. Refloat surface immediately to uniform granular texture.
   1. Finish surface to match that of adjacent existing concrete paving.

3.8 CONCRETE PROTECTION AND CURING

A. Protect freshly placed concrete from premature drying and excessive cold or hot temperatures.

B. Comply with ACI 306.1 for cold-weather protection.

C. Begin curing after finishing concrete but not before free water has disappeared from concrete surface.

D. Curing Methods: Cure concrete by using curing compound.
   1. Curing Compound: Apply uniformly in continuous operation by power spray or roller according to manufacturer's written instructions. Recoat areas subjected to heavy rainfall within three hours after initial application. Maintain continuity of coating and repair damage during curing period.

3.9 PAVEMENT TOLERANCES

A. Comply with tolerances of ACI 117 and as follows:
   1. Elevation: 1/4 inch (6 mm).
   2. Thickness: Plus 3/8 inch (10 mm), minus 1/4 inch (6 mm).
   3. Surface: Gap below 10-foot- (3-m-) long, unleveled straightedge not to exceed 1/4 inch (6 mm).
   4. Joint Spacing: 3 inches (75 mm).
   5. Joint Width: Plus 1/8 inch (3 mm), no minus.

3.10 PAVEMENT MARKINGS

A. Do not apply pavement-marking paint until layout, colors, and placement have been verified with Architect.

B. Allow concrete pavement to cure for 28 days and be dry before starting pavement marking.

C. Sweep and clean surface to eliminate loose material and dust.

D. Apply paint to produce pavement markings of dimensions indicated with uniform, straight edges. Apply at manufacturer's recommended rates to provide a minimum wet film thickness of 15 mils (0.4 mm).

3.11 FIELD QUALITY CONTROL

A. Testing Services:
1. Sampling Fresh Concrete: Representative samples of fresh concrete shall be obtained according to ASTM C 172, except modified for slump to comply with ASTM C 94.
2. Slump: ASTM C 143/C 143M; one test at point of placement for each composite sample, but not less than one test for each day's pour of each concrete mixture. Perform additional tests when concrete consistency appears to change.
3. Air Content: ASTM C 231, pressure method; one test for each composite sample, but not less than one test for each day's pour of each concrete mixture.
4. Concrete Temperature: ASTM C 1064/C 1064M; one test hourly when air temperature is 40 deg F (4.4 deg C) and below and when it is 80 deg F (27 deg C) and above, and one test for each composite sample.
5. Compression Test Specimens: ASTM C 31/C 31M; cast and laboratory cure one set of 4 standard cylinder specimens for each composite sample. Mold and store cylinders for laboratory-cured test specimens unless field-cured test specimens are required.
6. Compressive-Strength Tests: ASTM C 39/C 39M; test one specimen at seven days and two specimens at 28 days.
   a. A compressive-strength test shall be the average compressive strength from two specimens obtained from same composite sample and tested at 28 days.
7. Compressive-Strength Tests: ASTM C 39/C 39M; one set for each day's pour of each concrete class exceeding 5 cu. yd. (4 cu. m), but less than 25 cu. yd. (19 cu. m), plus one set for each additional 50 cu. yd. (38 cu. m). One specimen shall be tested at 7 days and two specimens at 28 days; one specimen shall be retained in reserve for later testing if required.
8. Strength level of concrete will be considered satisfactory if averages of sets of three consecutive compressive-strength test results equal or exceed specified compressive strength and no individual compressive-strength test result falls below specified compressive strength by more than 500 psi (3.4 MPa).

B. Report test result in writing to Architect, concrete manufacturer, and Contractor within 48 hours of testing. Reports of compressive-strength tests shall contain Project identification name and number, date of concrete placement, name of concrete testing and inspecting agency, location of concrete batch in Work, design compressive strength at 28 days, concrete mixture proportions and materials, compressive breaking strength, and type of break for both 7- and 28-day tests.

C. Non-destructive Testing: Impact hammer, sonoscope, or other nondestructive device may be permitted by Architect but will not be used as sole basis for approval or rejection of concrete.

D. Additional Tests: Testing and inspecting agency shall make additional tests of concrete when test results indicate that slump, air entrainment, compressive strengths, or other requirements have not been met, as directed by Architect.

E. Concrete paving will be considered defective if it does not pass tests and inspections.

F. Additional testing and inspecting, at Contractor's expense, will be performed to determine compliance of replaced or additional work with specified requirements.

G. Prepare test and inspection reports.

3.12 REPAIRS AND PROTECTION

A. Remove and replace concrete pavement that is broken, damaged, or defective or that does not comply with requirements in this Section.

B. Drill test cores, where directed by Architect, when necessary to determine magnitude of cracks or defective areas. Fill drilled core holes in satisfactory pavement areas with portland cement concrete bonded to pavement with epoxy adhesive.

C. Protect concrete from damage. Exclude traffic from pavement for at least 14 days after placement. When construction traffic is permitted, maintain pavement as clean as possible by removing surface stains and spillage of materials as they occur.

D. Maintain concrete pavement free of stains, discoloration, dirt, and other foreign material. Sweep concrete pavement not more than two days before date scheduled for Substantial Completion inspections.

END OF SECTION 32 13 00

SECTION 32 31 13 - CHAIN LINK FENCE

PART 1 - GENERAL

1.1 SUMMARY

A. Section includes chain link fencing with steel posts with concrete or galvanized steel base plates.
   1. The fence assemblies are not intended to have the supporting posts permanently secured and anchored in the ground.

PART 2 - PRODUCTS

2.1 CHAIN-LINK FENCING

A. Description: Chain link fence panels comprising fence frame and chain link material.

B. Chain-Link Fencing: Minimum 2-inch (50-mm) 9-gage, galvanized steel, chain-link fabric fencing; minimum 6 feet (1.8 m) high with galvanized steel pipe posts; minimum 2-3/8-inch- (60-mm-) OD line posts and 2-7/8-inch- (73-mm-) OD corner and pull posts, with 1-5/8-inch- (42-mm-) OD top and bottom rails. Posts with concrete or galvanized steel bases for supporting posts.
   1. Posts with caps.
   2. Provide fittings for a complete fence installation, including special fittings for corners.
   3. End and corner bracing posts.

C. Fence Fabric: 9 gauge x 2-inch mesh fabric (80,000 psi minimum after galvanizing) zinc-coated wire fabric (galvanized after weaving) that conforms to ASTM A-392.
   1. Selvage: Knuckled at both selvages.

D. Fence Fabric Connections: Attach fabric to terminal posts (end, corner, and/or pull) with 1/4” x 3/4” galvanized steel tension bars and 1”x 1/8” galvanized steel tension bands spaced at a maximum of 15” intervals. Attach fabric to top rail with 9 gauge galvanized tension wire shall be installed. Fasten to line posts with 9 gauge galvanized steel tie wire at maximum of 15” intervals.

PART 3 - EXECUTION

3.1 PREPARATION

A. Stake locations of fence lines.

B. Obtain approval prior to securing fence panels along the line.

3.2 INSTALLATION

A. Secure fence panels by tie wires. Bend ends of wire to minimize hazard to individuals and clothing.

B. Provide bracing for secure installation.

END OF SECTION 32 31 13

SECTION 32 93 00 - LANDSCAPE WORK

PART 1 - GENERAL

1.1 SUMMARY

A. Landscape work includes the following:
   1. Topsoil and associated material for seeding, and sodding for areas affected by work.
   2. Continuous 2-feet wide sod strips along edges of newly paved areas and existing pavement edges affected by work.
   3. Seed bare or other grade areas affected by construction of this project.

B. Landscape work is not required for site areas not affected by construction work in this project.

1.2 DELIVERY, STORAGE, AND HANDLING

A. Sod: Time delivery so that sod will be placed within 24 hours after stripping. Protect sod against drying and breaking of strips.

1.3 JOB CONDITIONS

A. Utilities: Determine location of underground utilities and perform work in a manner which will avoid damage.

PART 2 - PRODUCTS

2.1 TOPSOIL AND SOIL AMENDMENTS

A. Topsoil:
   1. Stockpiled Topsoil: Use stockpiled topsoil. If stockpiled topsoil resulting from site clearing is insufficient, provide additional topsoil to complete landscape work.
   2. Additional Topsoil: Obtain topsoil from local sources or from areas having similar soil characteristics to that found at project site.

B. Soil Amendments: Commercial fertilizer, Fertilome's "New Lawn Starter, or equal, applied at manufacturer's recommended rate.

2.2 GRASS MATERIALS

A. Grass Specie: Match predominant grass specie at each site.

B. Sod: Strongly rooted sod of, free of weeds and undesirable native grasses. Provide only sod capable of growth and development when planted (viable, not dormant).

C. Seed: Specie as indicated for Grass Specie above.

PART 3 - EXECUTION

3.1 PREPARATION

A. Preparation for Planting Lawns:
   1. Loosen subgrade to a minimum depth of 4-inches.
   2. Remove stones over 1-1/2-inches in any dimension, sticks, roots, rubbish and other extraneous matter.
   3. Spread planting soil mixture to minimum depth required to meet line, grades and elevations shown after light rolling and natural settlement.
   4. Add specified soil amendments. Mix thoroughly to upper 3-inches of topsoil.
   5. Place approximately 1/2 of total amount of planting soil required. Work into top of loosened subgrade to create a transition layer. Then place remainder of planting soil. Allow for sod thickness in areas to be sodded.
   6. Grade lawn areas to smooth, even surface with loose, uniformly fine texture. Roll, rake, remove ridges and fill depressions to meet finish grades.
   7. Fine grade areas which can be planted immediately after grading.
   8. Moisten prepared lawn areas before planting if soil is dry. Water thoroughly and allow surface moisture to dry before planting lawns. Do not create a muddy soil condition.

B. Preparation of Unchanged Grades: Remove existing grass, vegetation and turf. Till to a depth of not less than 6". Allow initial fertilizers as specified. Remove high areas and fill in depressions. Till soil to a homogeneous mixture of fine texture, free of lumps, clods, stones, roots and other extraneous matter.

3.2 SODDING AND SEEDING

A. Sodding: Lay sod within 24 hours from time of stripping. Do not plant dormant sod or if ground is frozen. Lay sod with tightly fitted joints. Butt ends and sides of sod strips. Do not overlap. Stagger strips to offset joints in adjacent courses. Tamp or roll lightly to ensure contact with subgrade. Work sifted soil into minor cracks between pieces of sod. Remove excess soil to avoid smothering of adjacent grass.

B. Seeding: Seed at the rate of 25 lb. per acre. Water seeded soil immediately thereafter using methods that do not wash away soil or seed. Continue procedures to keep seeded areas moist until grass has germinated. Examine for areas which fail to show uniform stand of grass. Reseed these areas and repeat procedure for grass to germinate.

3.3 CLEANUP AND PROTECTION

A. During landscaping, keep pavements clean and work area in an orderly condition.

B. Protect landscaping from damage due to landscape operations, operations by other contractors and trades, and trespassers. Maintain protection during installation and maintenance periods. Treat, repair, or replace damaged landscape work as directed.

3.4 DISPOSAL OF SURPLUS AND WASTE MATERIALS

A. Disposal: Remove surplus soil and waste material, including excess subsoil, unsuitable soil, trash, and debris, and legally dispose of it off the Owner's property.

END OF SECTION 32 93 00

SB-10593

ST. AMANT HIGH SCHOOL MODULAR BUILDING TEMPORARY CAMPUS

OCTOBER 27, 2016

12035 LA HWY 431, ST. AMANT, LA 70774

CONSTRUCTION DOCUMENT SET

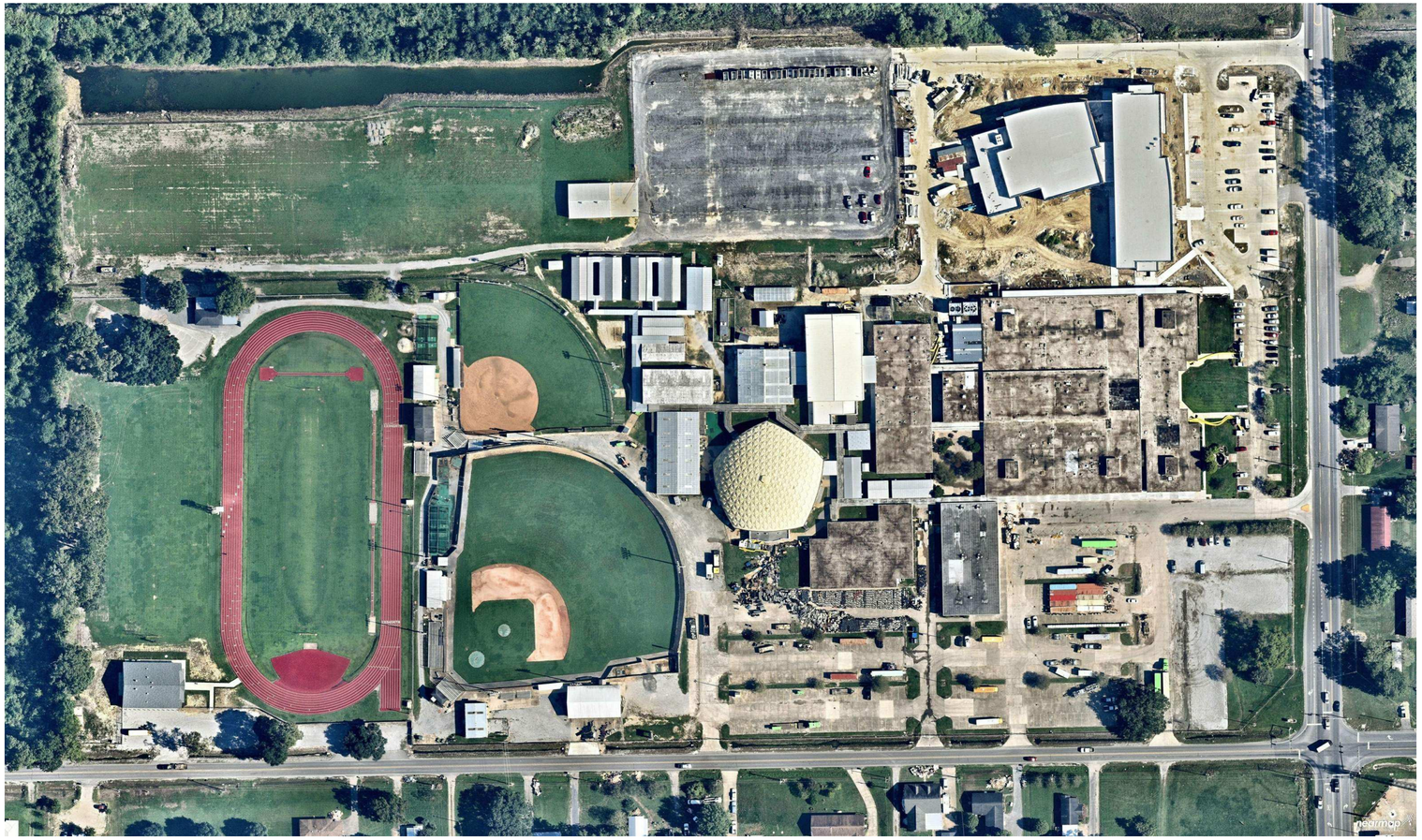

ASCENSION PUBLIC SCHOOLS

Every Child Successful In An Ever-Changing World

School Board Members

DAVID ALEXANDER
Superintendent

Robyn Penn Delaney
District 1, Seat A

Scott Duplechein
District 2

Julie Blouin
District 3

Kerry Diez
District 4, Seat A

John D. Murphy
District 4, Seat B

Shawn Sevario
District 5, Seat A

Taft C. Kleinpeter
District 5, Seat B

Lorraine Wimberly
District 6, Seat A

Louis Lambert
District 6, Seat B

Troy J. Gautreau, Sr.
District 7, Seat A

Patricia Russo
District 7, Seat B

TABLE OF CONTENTS

ENGINEER
CRUMB ENGINEERING
4609 FAIRFIELD STREET
METARIE, LA 70006
504.455.4450

ARCHITECT
DOMAIN ARCHITECTURE
8316 KELWOOD AVE.
BATON ROUGE, LA
70806
225.216.3770

DOMAIN APAC ARCHITECTURE

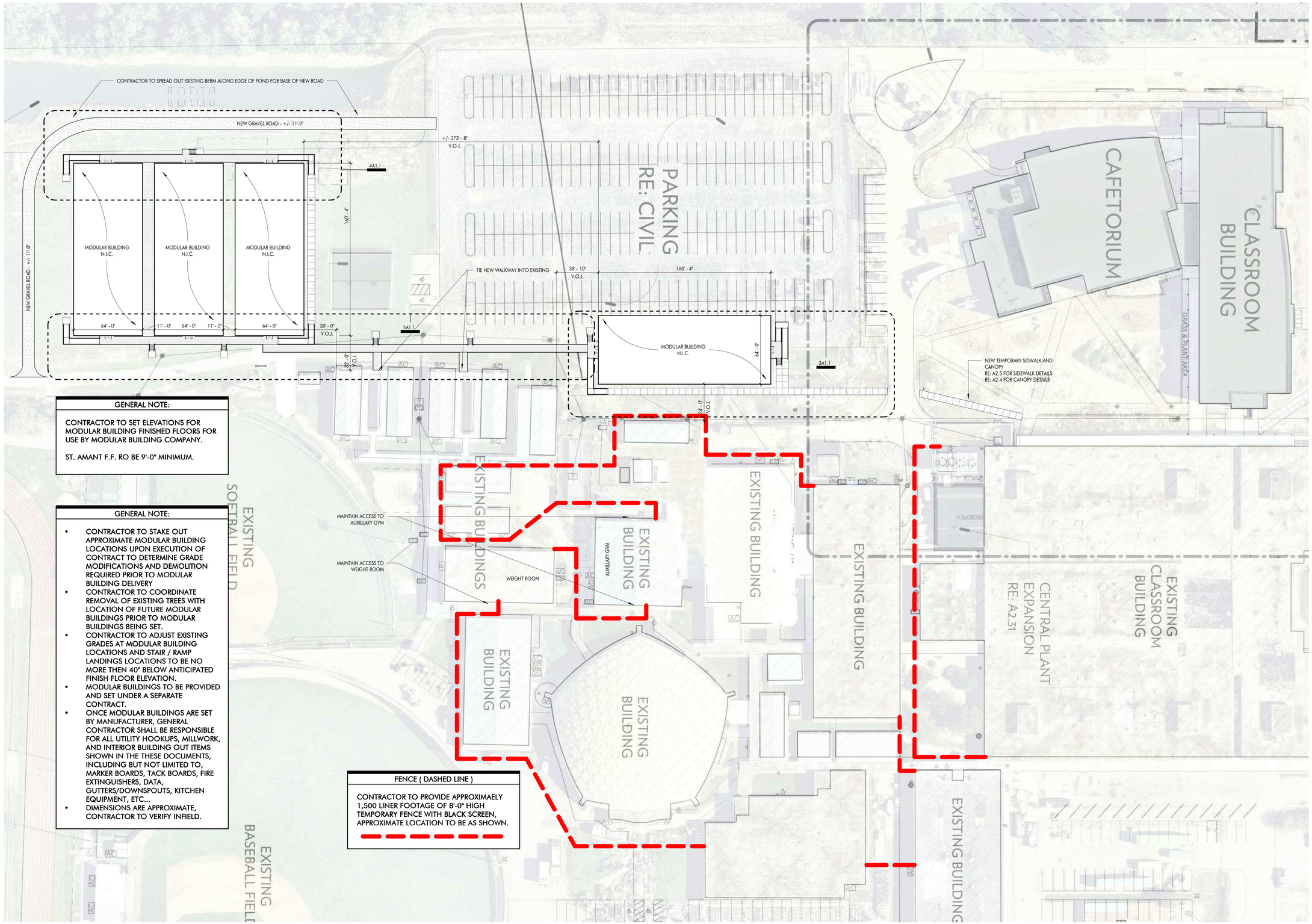

GENERAL NOTE:

CONTRACTOR TO SET ELEVATIONS FOR MODULAR BUILDING FINISHED FLOORS FOR USE BY MODULAR BUILDING COMPANY.

ST. AMANT F.F. RO BE 9'-0" MINIMUM.

GENERAL NOTE:

- CONTRACTOR TO STAKE OUT APPROXIMATE MODULAR BUILDING LOCATIONS UPON EXECUTION OF CONTRACT TO DETERMINE GRADE MODIFICATIONS AND DEMOLITION REQUIRED PRIOR TO MODULAR BUILDING DELIVERY
- CONTRACTOR TO COORDINATE REMOVAL OF EXISTING TREES WITH LOCATION OF FUTURE MODULAR BUILDINGS PRIOR TO MODULAR BUILDINGS BEING SET.
- CONTRACTOR TO ADJUST EXISTING GRADES AT MODULAR BUILDING LOCATIONS AND STAIR / RAMP LANDINGS LOCATIONS TO BE NO MORE THEN 40" BELOW ANTICIPATED FINISH FLOOR ELEVATION.
- MODULAR BUILDINGS TO BE PROVIDED AND SET UNDER A SEPARATE CONTRACT.
- ONCE MODULAR BUILDINGS ARE SET BY MANUFACTURER, GENERAL CONTRACTOR SHALL BE RESPONSIBLE FOR ALL UTILITY HOOKUPS, MILLWORK, AND INTERIOR BUILDING OUT ITEMS SHOWN IN THE THESE DOCUMENTS, INCLUDING BUT NOT LIMITED TO, MARKER BOARDS, TACK BOARDS, FIRE EXTINGUISHERS, DATA, GUTTERS/DOWNSPOUTS, KITCHEN EQUIPMENT, ETC...
- DIMENSIONS ARE APPROXIMATE, CONTRACTOR TO VERIFY INFIELD.

FENCE (DASHED LINE)

CONTRACTOR TO PROVIDE APPROXIMAELY 1,500 LINER FOOTAGE OF 8'-0" HIGH TEMPORARY FENCE WITH BLACK SCREEN, APPROXIMATE LOCATION TO BE AS SHOWN.

1 CAMPUS PLAN - SAHS

1" = 40'-0"

DOMAIN APAC ARCHITECTURE

www.domain-dsgn.com
8316 kelwood avenue
baton rouge, la 70806
225.216.3770 ph
225.216.3771 fax

SB-10593

ST. AMANT HIGH SCHOOL

MODULAR BUILDING TEMPORARY CAMPUS

12035 LA HWY 431, ST. AMANT, LA 70774

mechanical & electrical engineer:
CRUMB ENGINEERING
4609 FAIRFIELD STREET
METAIRIE, LA 70006
504.455.4450

structural engineer:

civil engineer:

landscape architect:

revisions

No.	Description	Date

PROJ. #: C16-0071C

date
OCTOBER 27, 2016

sheet
A1.0

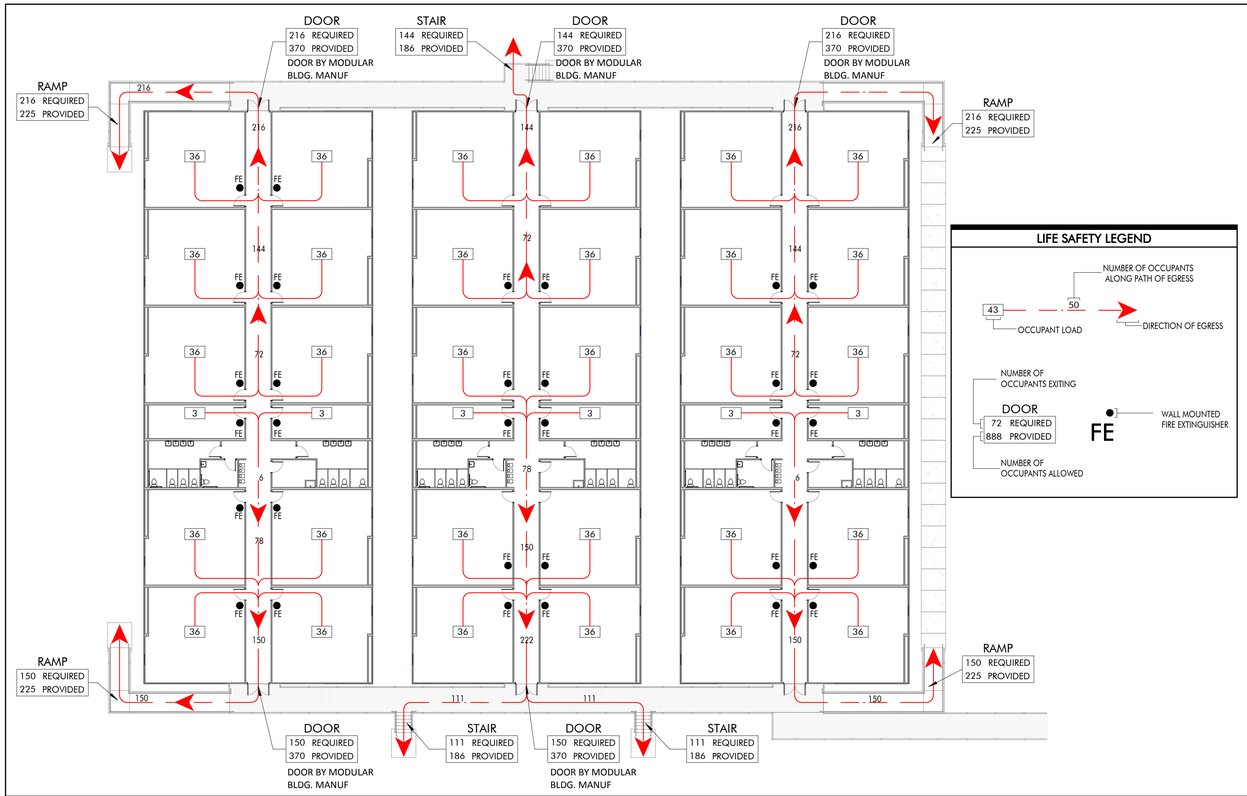

1 1ST FLOOR - LIFE SAFETY 1
1" = 20'-0"

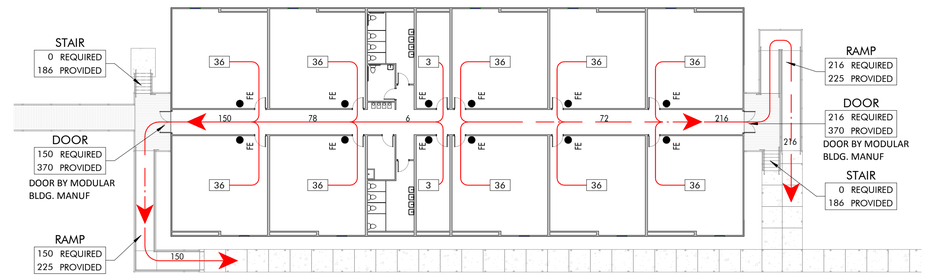

2 1ST FLOOR - LIFE SAFETY 2
1" = 20'-0"

REFER TO CLASSROOM MILLWORD SHEET A2.6 FOR TYPICAL MILLWORK IN ALL CLASSROOMS (40 TOTAL)

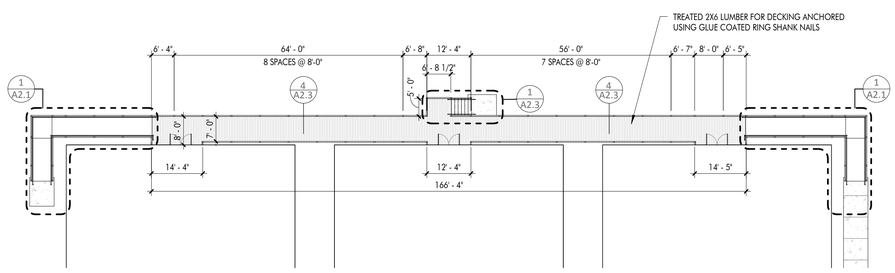

4 CAMPUS PLAN - SAHS - NORTH POD
1" = 20'-0"

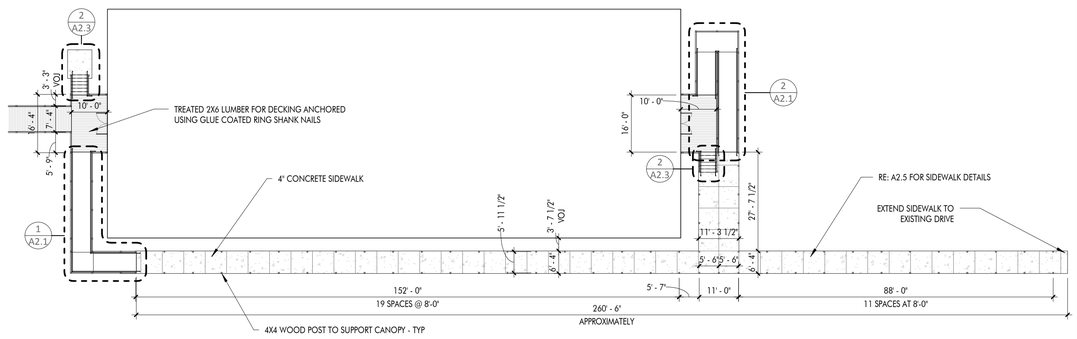

3 CAMPUS PLAN - SAHS - EAST BUILDING
1" = 20'-0"

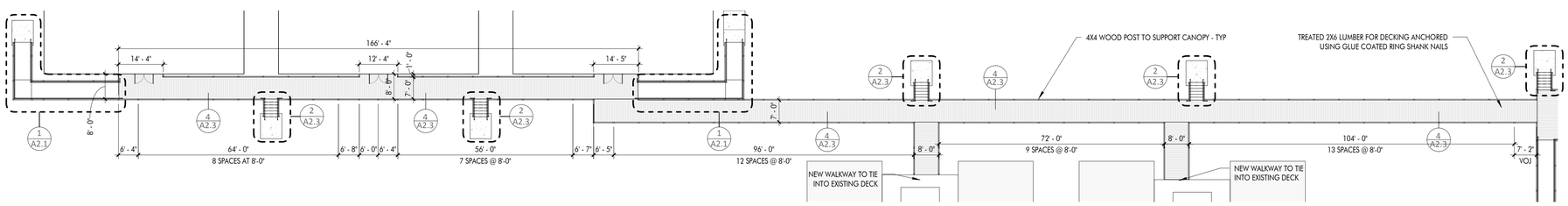

5 CAMPUS PLAN - SAHS - SOUTH POD
1" = 20'-0"

DOMAIN ARCHITECTURE APAC

www.domain-dsgn.com
8316 kelwood avenue
baton rouge, la 70806
225.216.3770 ph
225.216.3771 fax

SB-10593
ST. AMANT HIGH SCHOOL
MODULAR BUILDING TEMPORARY CAMPUS
12035 LA HWY 431, ST. AMANT, LA 70774

mechanical & electrical engineer:
CRUMB ENGINEERING
4609 FAIRFIELD STREET
METAIRIE, LA 70006
504.455.4450

structural engineer:

civil engineer:

landscape architect:

revisions

No.	Description	Date

PROJ. #: C16-0071C

date
OCTOBER 27, 2016

sheet
A1.1

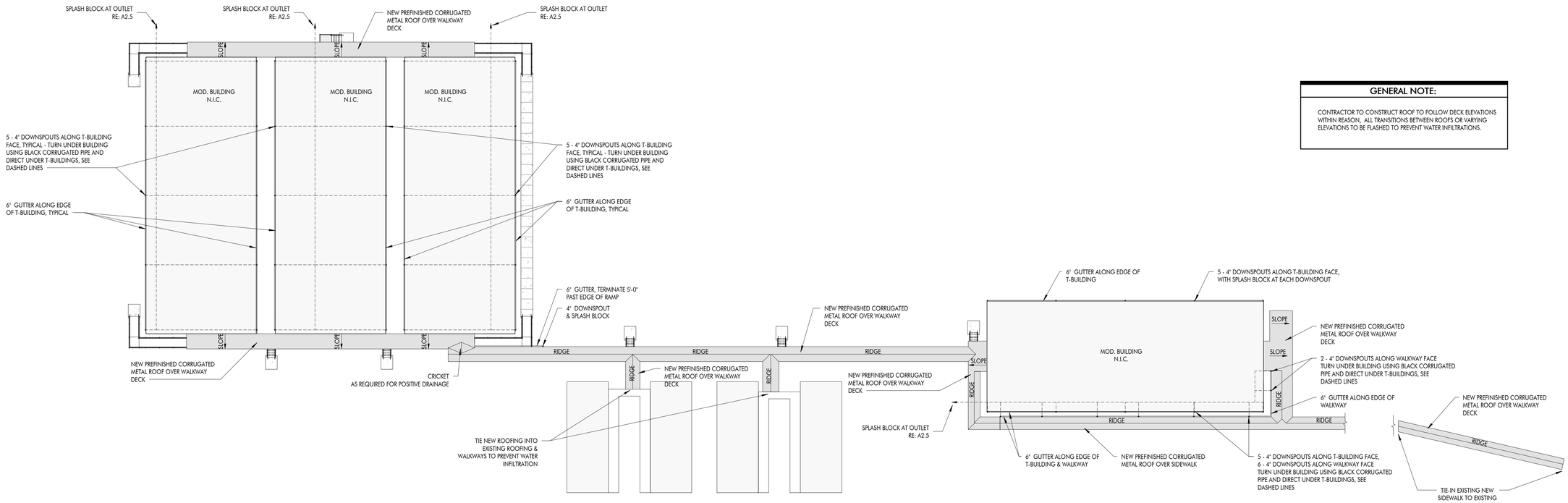

GENERAL NOTE:

CONTRACTOR TO CONSTRUCT ROOF TO FOLLOW DECK ELEVATIONS WITHIN REASON, ALL TRANSITIONS BETWEEN ROOFS OR VARYING ELEVATIONS TO BE FLASHED TO PREVENT WATER INFILTRATIONS.

1 ROOF PLAN

1" = 30'-0"

DOMAIN ARCHITECTURE APAC

www.domain-dsgn.com
8316 kelwood avenue
baton rouge, la 70806
225.216.3770 ph
225.216.3771 fax

SB-10593

ST. AMANT HIGH SCHOOL

MODULAR BUILDING TEMPORARY CAMPUS

12035 LA HWY 431, ST. AMANT, LA 70774

mechanical & electrical engineer:
CRUMB ENGINEERING
4609 FAIRFIELD STREET
METAIRIE, LA 70006
504.455.4450

structural engineer:

civil engineer:

landscape architect:

revisions

No.	Description	Date

PROJ. #: C16-0071C

date
OCTOBER 27, 2016

sheet
A1.2

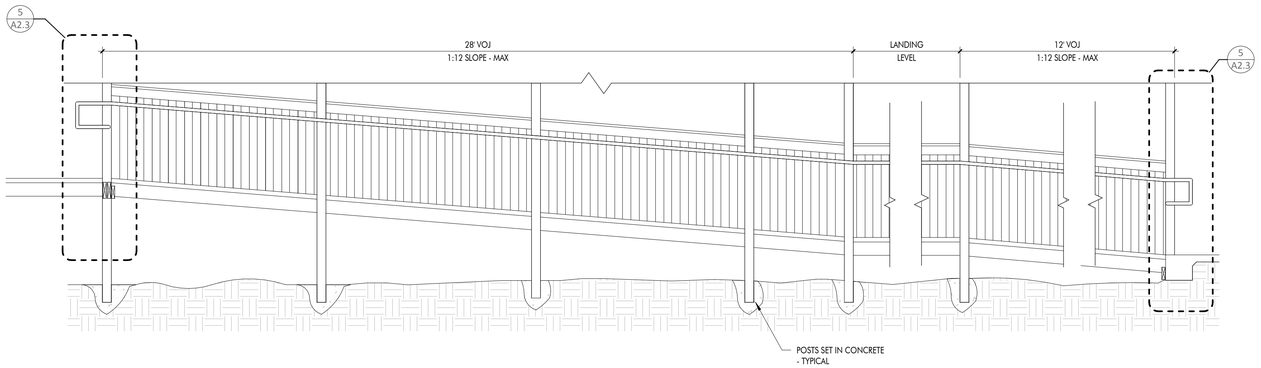

3 SCHEMATIC TYPICAL RAMP SECTION

3/8" = 1'-0"

RE: A2.3 FRAMING NOTES - TYPICAL

4 FRAMING PLAN - L-SHAPE

1/8" = 1'-0"

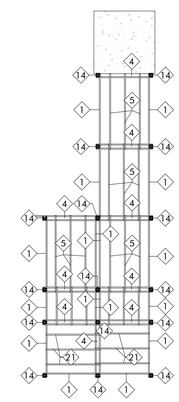

5 FRAMING PLAN - U-SHAPE

1/8" = 1'-0"

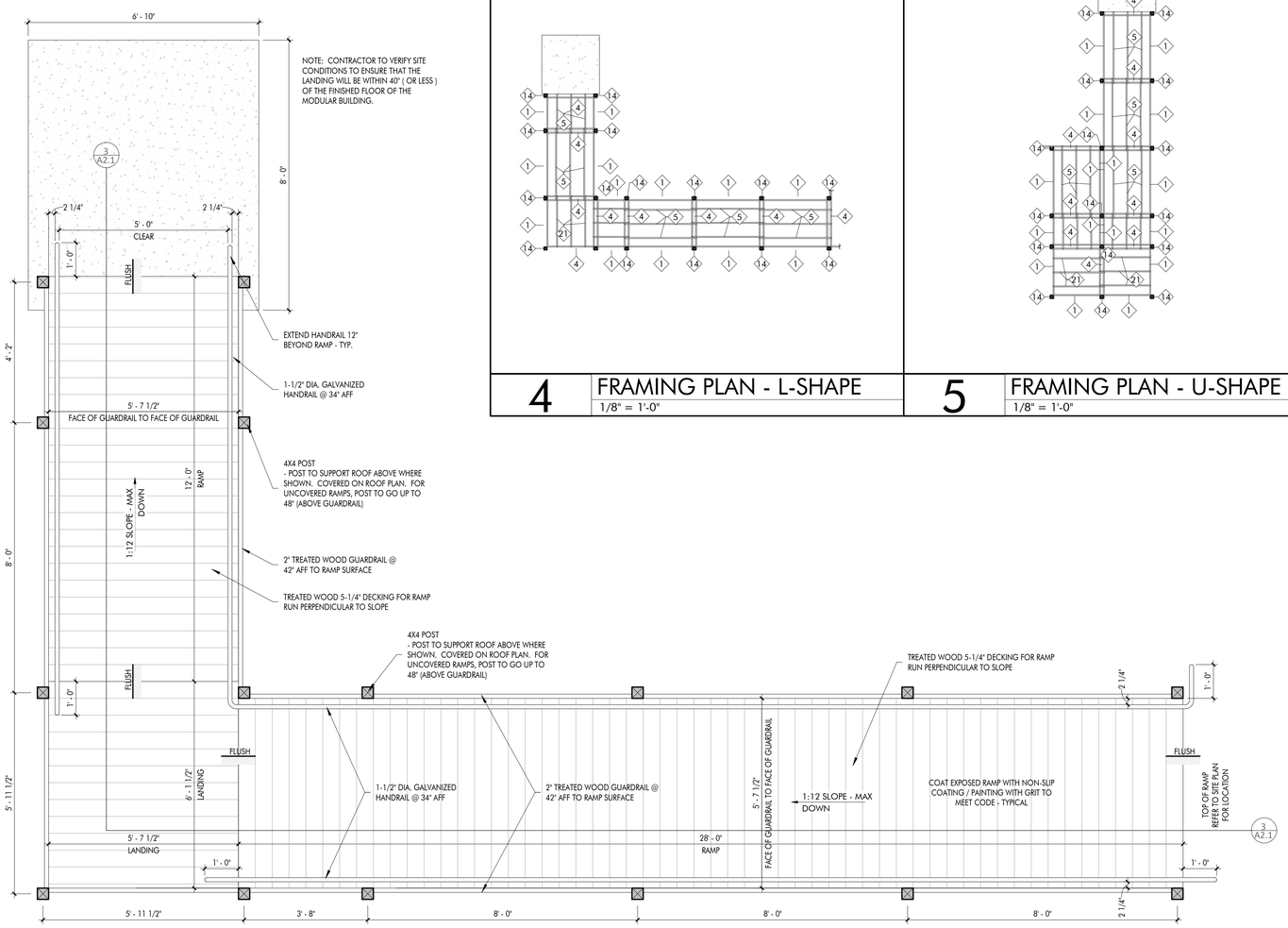

1 RAMP PLAN - L-SHAPE

1/2" = 1'-0"

GENERAL NOTE

CONTRACTOR TO VERIFY SITE CONDITIONS TO ENSURE THAT LANDINGS WILL BE WITHIN 40 INCHES (OR LESS) OF THE FINISHED FLOOR OF THE MODULAR BUILDING. CONTRACTOR TO NOTIFY ARCHITECT IF IT IS GREATER THAN 44 INCHES.

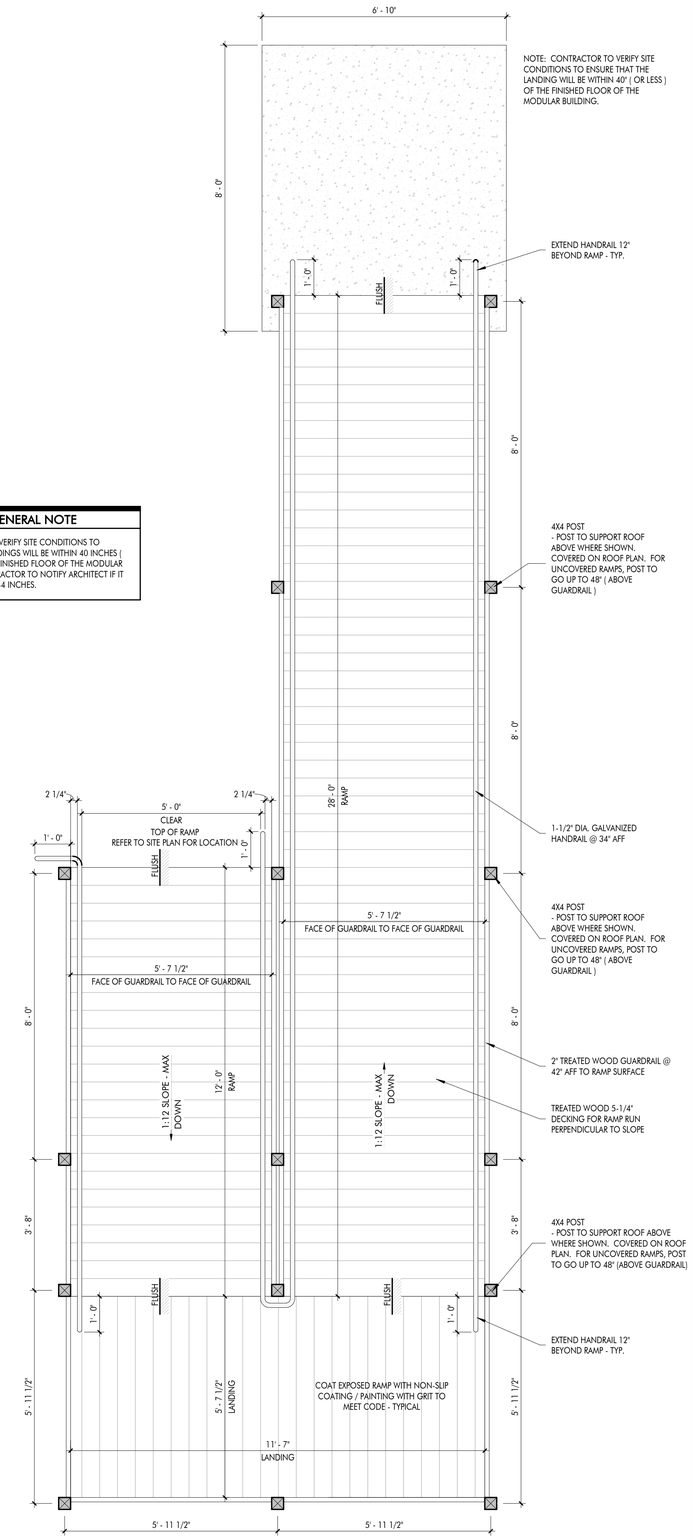

2 RAMP PLAN - U-SHAPE

1/2" = 1'-0"

DOMAIN APAC
ARCHITECTURE

www.domain-dsgn.com
8316 kelwood avenue
baton rouge, la 70806
225.216.3770 ph
225.216.3771 fax

SB-10593

ST. AMANT HIGH SCHOOL

MODULAR BUILDING TEMPORARY CAMPUS

12035 LA HWY 431, ST. AMANT, LA 70774

mechanical & electrical engineer:
CRUMB ENGINEERING
4609 FAIRFIELD STREET
METAIRIE, LA 70006
504.455.4450

structural engineer:

civil engineer:

landscape architect:

revisions

No.	Description	Date

PROJ. #: C16-0071C

date
OCTOBER 27, 2016

sheet
A2.1

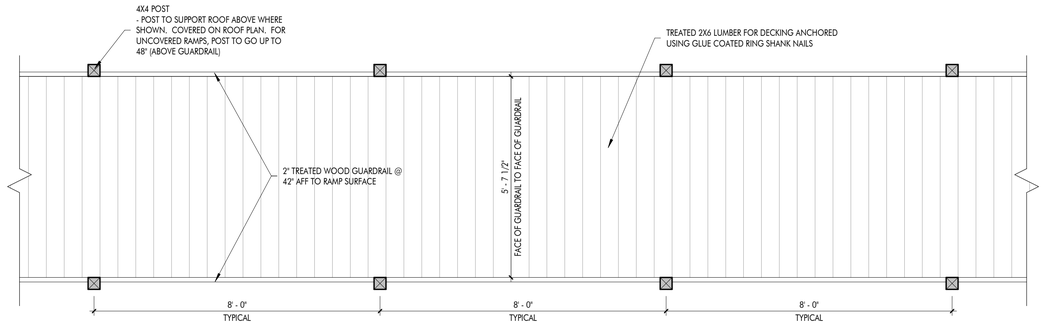

4 ELEVATED WALKWAY PLAN
1/2" = 1'-0"

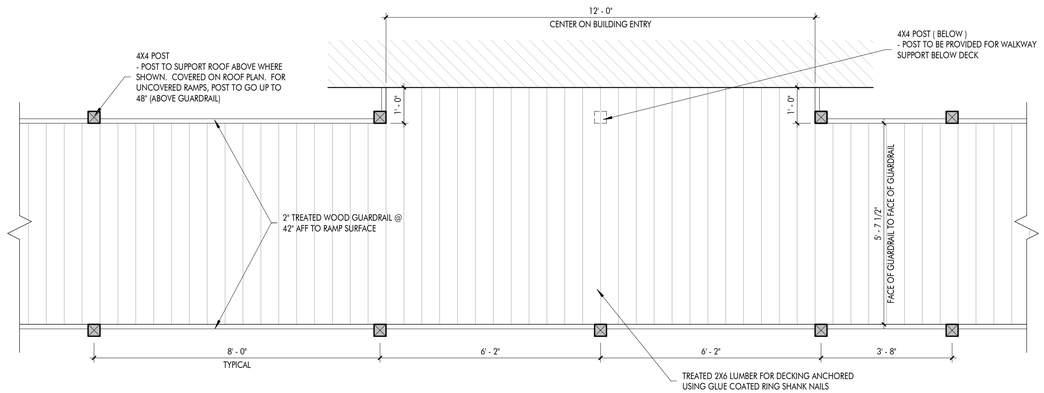

7 ELEVATED WALKWAY AT TYPICAL BLDG. ENTRY (OTHERS SIMILAR)
1/2" = 1'-0"

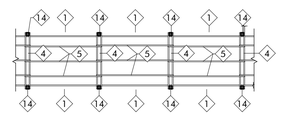

5 FRAMING PLAN - WALKWAY
1/8" = 1'-0"

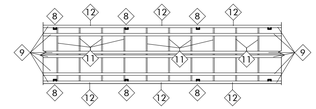

6 FRAMING PLAN - TYP. ROOF
1/8" = 1'-0"

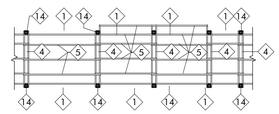

8 FRAMING PLAN - ENTRY
1/8" = 1'-0"

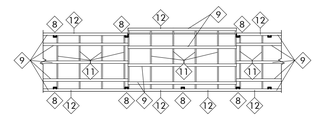

9 FRAMING PLAN - ENTRY ROOF
1/8" = 1'-0"

1	TREATED 2X10
2	4X4 TREATED POST TO SUPPORT CANOPY SET IN CONCRETE (MINIMUM 2'-0")
3	4X4 TREATED POST TO UNDERSIDE OF DECK; SET IN CONCRETE (MINIMUM 2'-0")
4	DOUBLE TREATED 2X10
5	TREATED 2X8 @ 24" O.C. FLOOR JOISTS- TYPICAL
6	2X6 SUPPORT
7	TREATED 2X8 LEDGER SCREWED TO FACE OF BUILDING
8	ANCHOR RAFTERS TO WOOD POSTS- TYPICAL EVERY POST - DOUBLE RAFTER AT POST LOCATIONS; ONE EACH SIDE
9	2X4 TREATED PURLINS @ 24" O.C.
10	4X4 POST ABOVE BEAM TO SUPPORT RIDGE BOARD
11	2X6 TREATED WOOD RAFTERS @ 24" O.C. - SLOPE AS NECESSARY
12	2X6 TREATED WOOD BEAM IN NOTCHED 4X4 WITH 2X8 BEAM ADJACENT; ANCHOR 2X6 TO 2X8 WITH 3 SCREWS EVERY 12" O.C. RE: WALKWAY SECTION
13	2X12 RAFTERS
14	4X4 TREATED POST TO GUARDRAIL HEIGHT (4' - 0" ABOVE DECK) - SET IN CONCRETE (MINIMUM 2'-0")
15	TREATED 2X6 LEDGER - ANCHOR TO BUILDING UNDER EXISTING OVERHANG - FLASH AS NECESSARY TO PREVENT WATER
16	TREATED 2X18 RIDGE BOARD - CONTINUOUS
17	TRIPLE 2X12 BEAM CONTINUOUS
18	DOUBLE 2X8 BEAM
19	DOUBLE RAFTER @ RIDGEBOARD TIE-IN
20	2X6 RIDGEBOARD
21	2X8 FLOOR JOISTS AT 16" O.C.
22	DOUBLE 2X12 RIDGE BEAM CONTINUOUS
23	2X8 TREATED WOOD BEAM IN NOTCHED 4X4 WITH 2X10 BEAM ADJACENT; ANCHOR 2X8 TO 2X10 WITH 3 SCREWS EVERY 12" O.C. & ANCHOR 2X8 TO 4X4 WITH (4) 3" SCREWS RE: SECTION

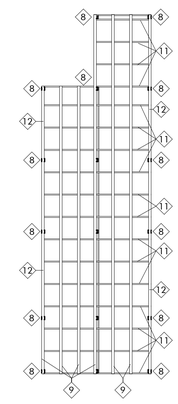

3 FRAMING PLAN -KIT. ROOF
1/8" = 1'-0"

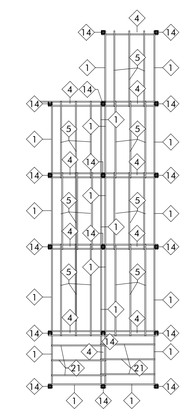

2 FRAMING PLAN - KITCHEN
1/8" = 1'-0"

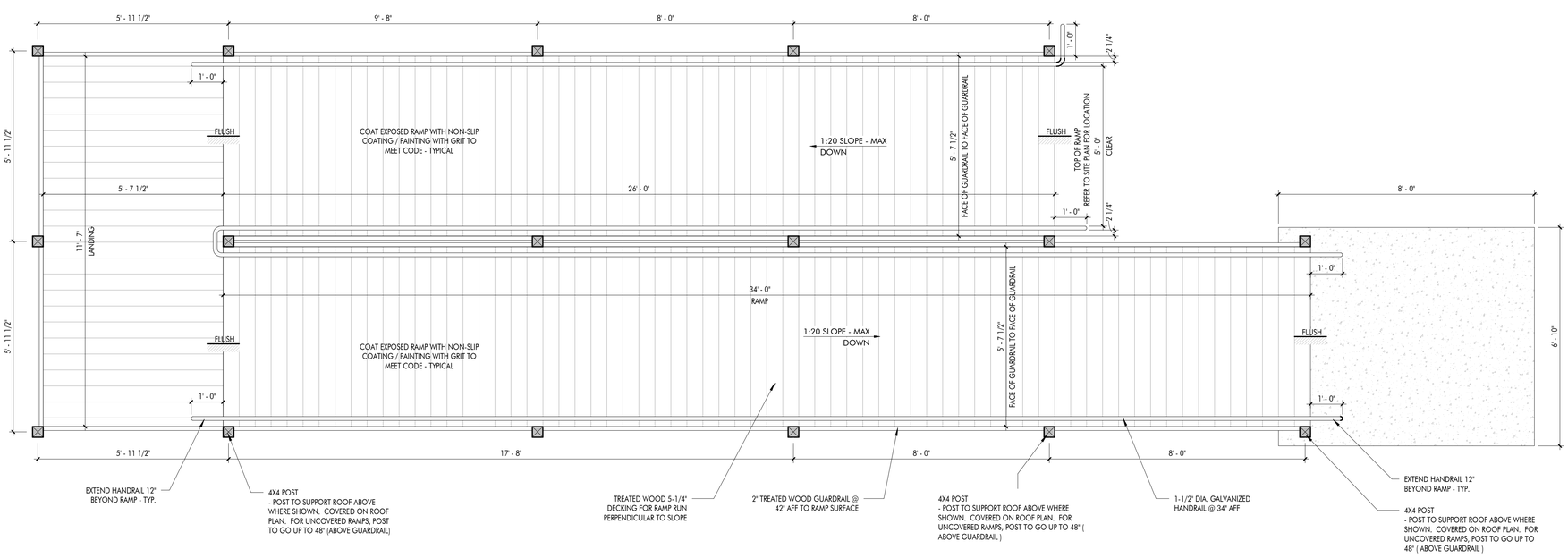

1 RAMP PLAN - KITCHEN (1:20 SLOPE)
1/2" = 1'-0"

DOMAIN ARCHITECTURE APAC

www.domain-dsgn.com
8316 kelwood avenue
baton rouge, la 70806
225.216.3770 ph
225.216.3771 fax

SB-10593
ST. AMANT HIGH SCHOOL
MODULAR BUILDING TEMPORARY CAMPUS
12035 LA HWY 431, ST. AMANT, LA 70774

mechanical & electrical engineer:
CRUMB ENGINEERING
4609 FAIRFIELD STREET
METAIRIE, LA 70006
504.455.4450

structural engineer:

civil engineer:

landscape architect:

revisions

No.	Description	Date

PROJ. #: C16-0071C

date
OCTOBER 27, 2016

sheet
A2.2

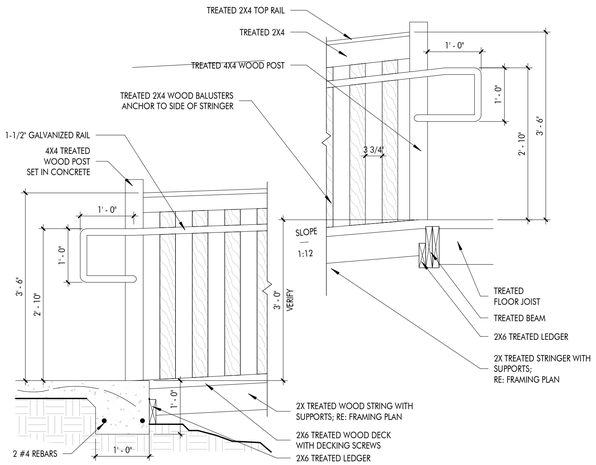

5 T-BLDG - RAMP DETAIL

3/4" = 1'-0"

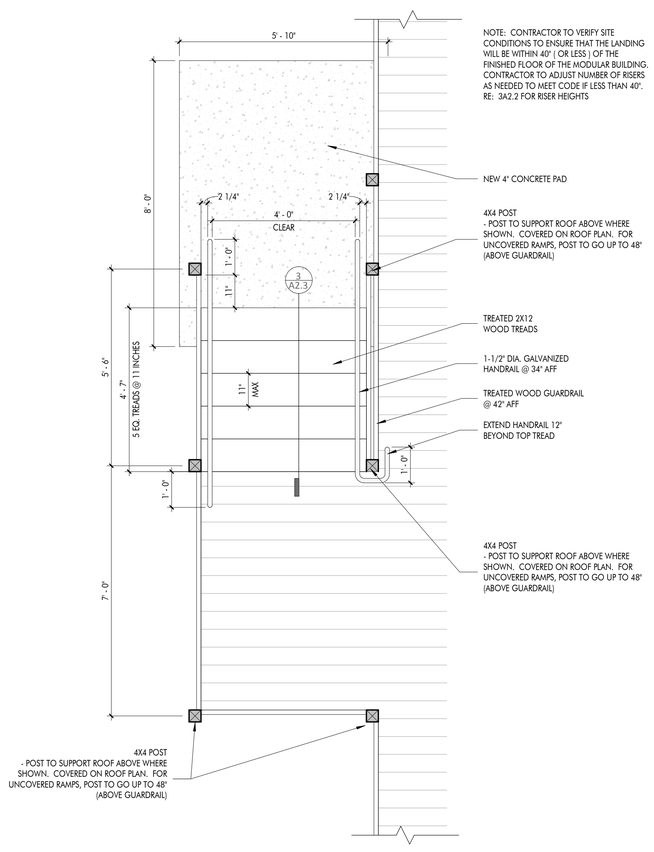

1 STAIR PLAN - W/ TOP LANDING

1/2" = 1'-0"

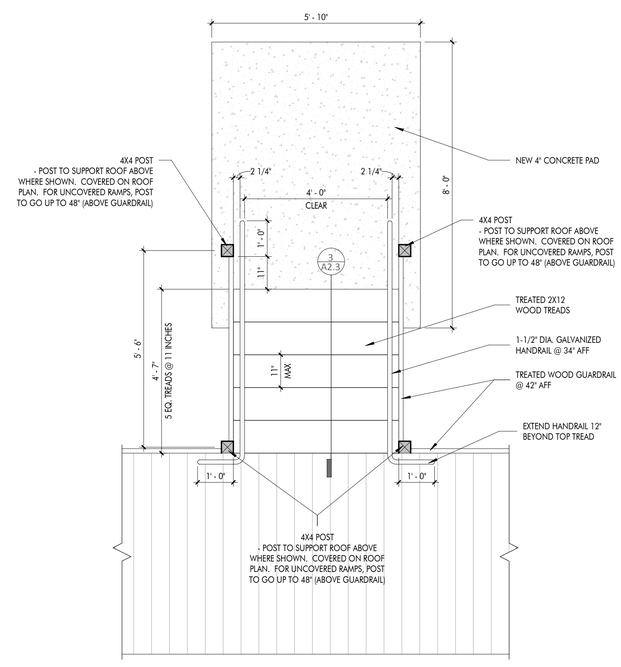

2 STAIR PLAN - STRAIGHT

1/2" = 1'-0"

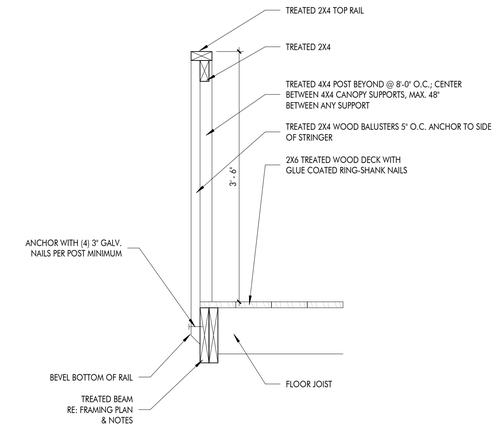

4 T-BLDG - RAIL DETAIL

1" = 1'-0"

1. ALL FRAMING SHALL BE IN ACCORDANCE WITH THE INTERNATIONAL BUILDING CODE AND SHALL BE ABLE TO WITHSTAND APPLICABLE LOADS AS REQUIRED.
2. ALL WOOD FRAMING MEMBERS SHALL BE NO. 2 PINE KILN-DRIED WITH 15% MOISTURE CONTENT AT THE TIME OF DRESSING.
3. CRICKETS TO BE PLACED IN ALL AREAS TO MAINTAIN PROPER POSITIVE DRAINAGE.
4. ALL WOOD TO BE TREATED LUMBER.
5. ALL CONCRETE SHALL BE NORMAL WEIGHT AND SHALL DEVELOP A MIN. COMPRESSIVE STRENGTH OF 3500 PSI @ 28 DAYS WITH A MINIMUM PORTLAND CEMENT CONTENT OF 5.3 BAGS PER CUBIC YARD.
6. ALL CONCRETE SHALL CONTAIN A MAXIMUM SLUMP OF 4"
7. ALL GROUT SHALL BE NON-SHRINK GROUT ON THIS JOB.
8. ALL EXPOSED SURFACES OF GRADE BEAMS, WALLS, AND SLAB EDGES SHALL BE COATED WITH A REPAIR MORTAR AS REQUIRED.
9. ALL REBAR SHALL BE GRADE 60 (FY=60,000 PSI MIN.)
10. ALL DECK BOARDS SHALL BE NAILED USING GLUE COATED 8D GALVANIZED RING-SHANK NAILS.
11. ALL RAILINGS SHALL BE NAILED USING GALVANIZED RING-SHANK NAILS.
12. ALL ROOFING SHALL BE COATED CORRUGATED ROOFING TO MATCH EXISTING WALKWAYS. WHERE NO EXISTING WALKWAYS EXIST, CONTRACTOR TO USE 26 GA GALVALUME 'S' PANEL (CORRUGATED)
13. CONTRACTOR TO REMOVE ALL TAGS FROM LUMBER PRIOR TO INSTALLATION.
14. CONTRACTOR TP CULL WOOD THAT IS NOT ACCEPTABLE QUALITY FOR EXPOSED FRAMING.

GENERAL NOTES

STAIR SECTION SHOWN FOR CLARITY, ACTUAL RISER HEIGHT TO BE DETERMINED BY CONTRACTOR ONSITE WITH EXISTING GRADES.

APPROX. RISER / TREAD DIMENSIONS:

0" TO 7"	1 RISERS / 0 TREADS
7" TO 14"	2 RISERS / 1 TREADS
14" TO 21"	3 RISERS / 2 TREADS
21" TO 28"	4 RISERS / 3 TREADS
28" TO 35"	5 RISERS / 4 TREADS
35" TO 42"	6 RISERS / 5 TREADS
42" TO 49"	7 RISERS / 6 TREADS

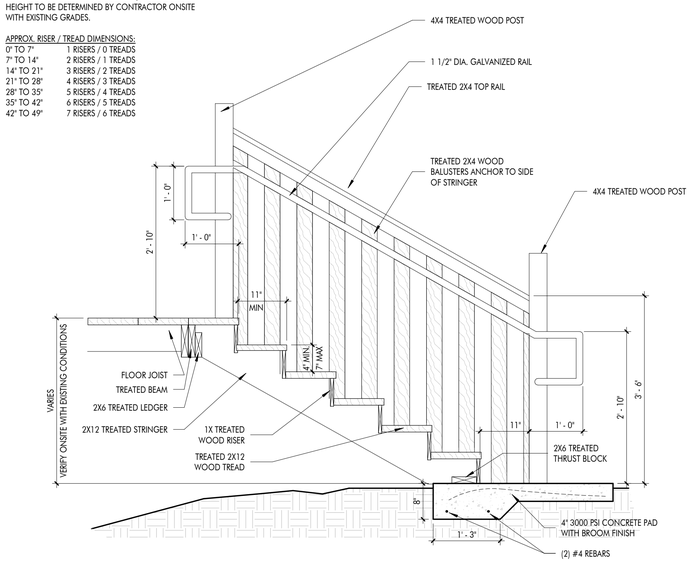

3 T-BLDG - STAIR SECTION

3/4" = 1'-0"

DOMAIN ARCHITECTURE APAC

www.domain-dsgn.com
8316 kelwood avenue
baton rouge, la 70806
225.216.3770 ph
225.216.3771 fax

SB-10593

ST. AMANT HIGH SCHOOL

MODULAR BUILDING TEMPORARY CAMPUS

12035 LA HWY 431, ST. AMANT, LA 70774

mechanical & electrical engineer:
CRUMB ENGINEERING
4609 FAIRFIELD STREET
METAIRIE, LA 70006
504.455.4450

structural engineer:

civil engineer:

landscape architect:

revisions

No.	Description	Date

PROJ. #: C16-0071C

date
OCTOBER 27, 2016

sheet
A2.3

OCTOBER 27, 2016

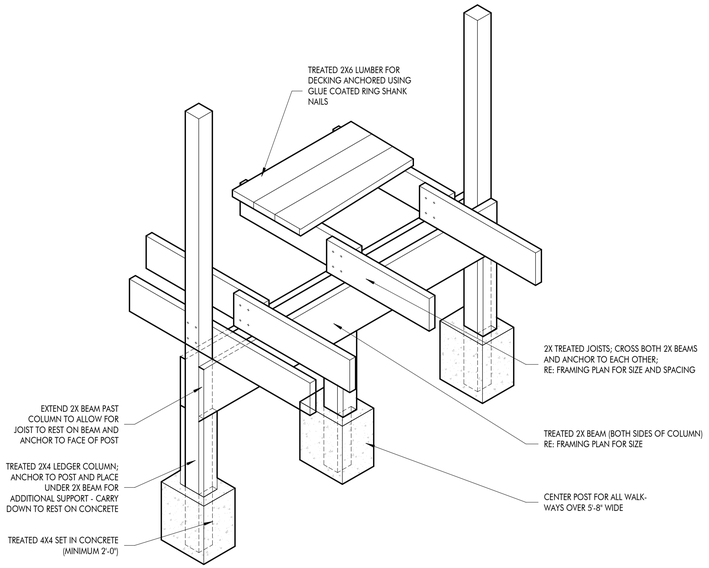

1 T-BLDG - PORCH FRAMING
3/4" = 1'-0"

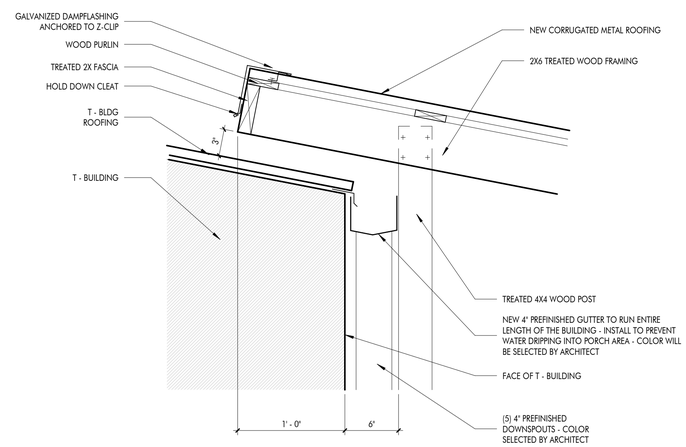

3 T-BLDG - PORCH ROOF DETAIL
1 1/2" = 1'-0"

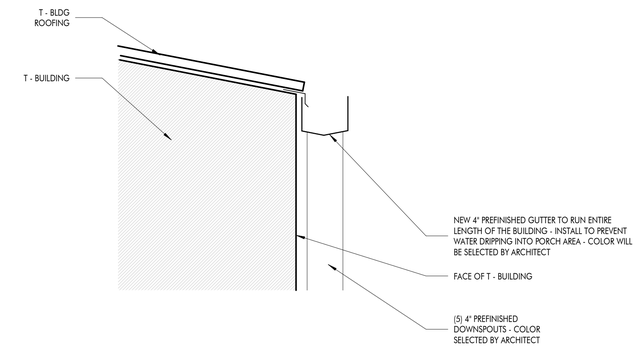

6 T-BLDG - PORCH - NEW GUTTER
1 1/2" = 1'-0"

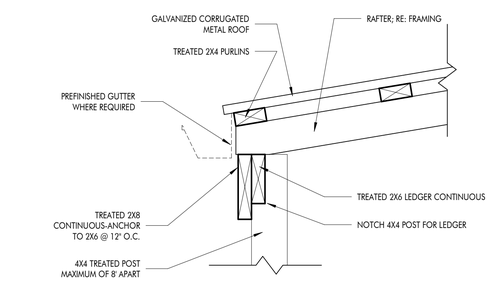

4 T-BLDG - TYPICAL EAVE FRAMING
1 1/2" = 1'-0"

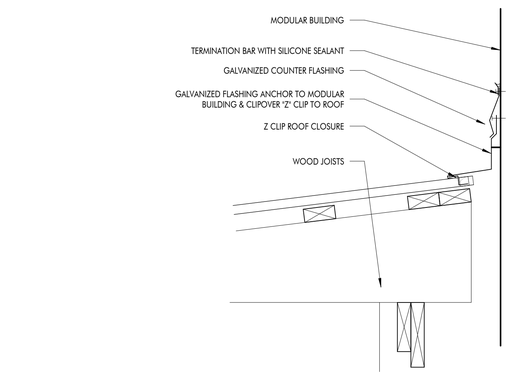

7 FLASHING- @ MOD BLDG
1 1/2" = 1'-0"

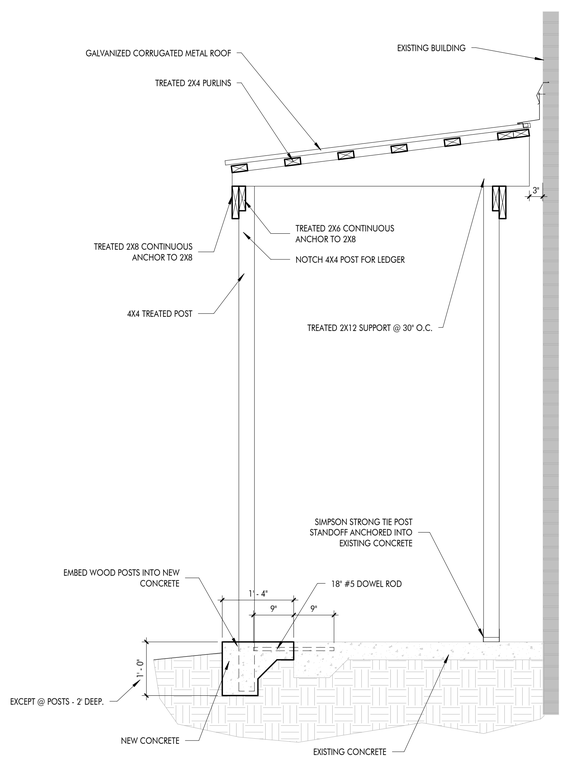

2 T-BLDG - CANOPY SECTION @ EXISTING BLDG
3/4" = 1'-0"

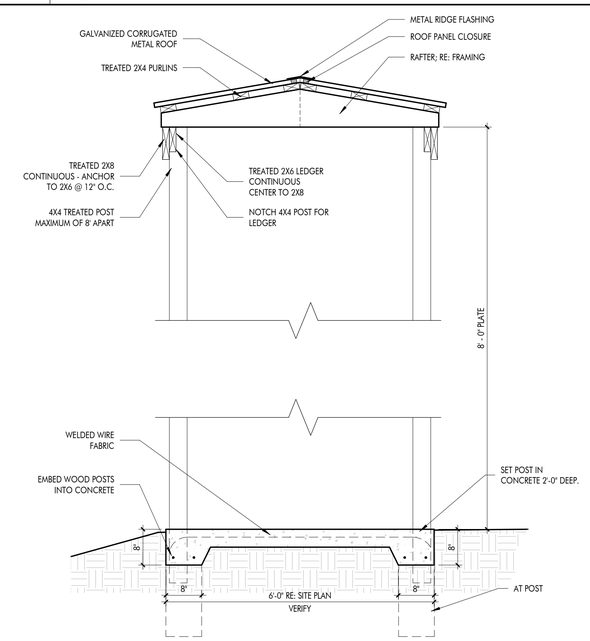

5 T-BLDG - TYP. CANOPY SECTION - ON GRADE
3/4" = 1'-0"

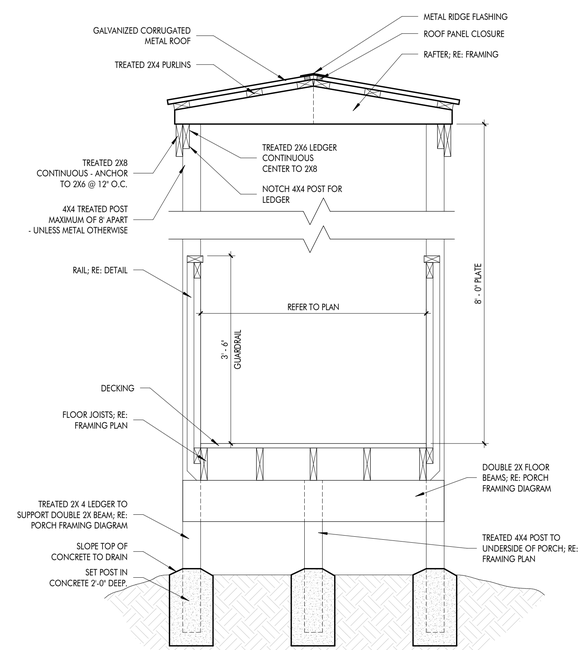

8 T-BLDG - TYP. CANOPY SECTION - WALKWAY
3/4" = 1'-0"

DOMAIN ARCHITECTURE APAC

www.domain-dsgn.com
8316 kelwood avenue
baton rouge, la 70806
225.216.3770 ph
225.216.3771 fax

SB-10593
ST. AMANT HIGH SCHOOL
MODULAR BUILDING TEMPORARY CAMPUS

12035 LA HWY 431, ST. AMANT, LA 70774

mechanical & electrical engineer:
CRUMB ENGINEERING
4609 FAIRFIELD STREET
METAIRIE, LA 70006
504.455.4450

structural engineer:

civil engineer:

landscape architect:

revisions

No.	Description	Date

PROJ. #: C16-0071C

date
OCTOBER 27, 2016

sheet
A2.4

OCTOBER 27, 2016

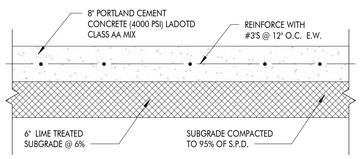

1 DETAILS - CONCRETE PAVEMENT SECTION

3/4" = 1'-0"

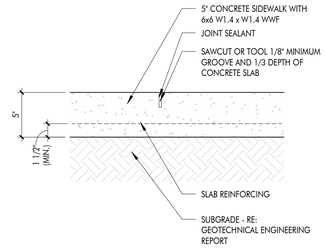

4 DETAIL - SAWCUT / TOOLED JOINT

1 1/2" = 1'-0"

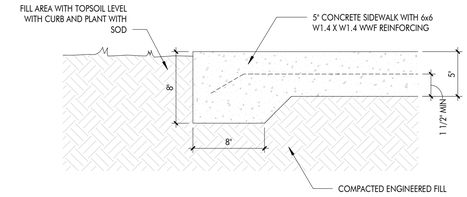

7 DETAIL - SIDEWALK AT GRADE

1 1/2" = 1'-0"

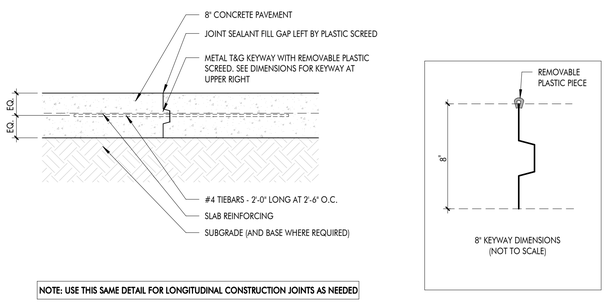

NOTE: USE THIS SAME DETAIL FOR LONGITUDINAL CONSTRUCTION JOINTS AS NEEDED

2 DETAIL - LONGITUDINAL JOINT (LJ)

1 1/2" = 1'-0"

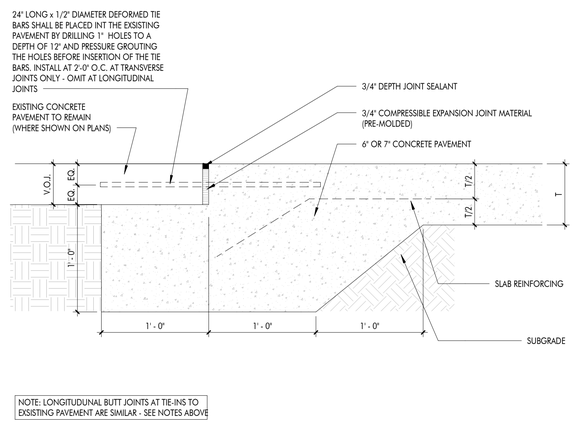

NOTE: LONGITUDUNAL BUTT JOINTS AT TIE-INS TO
EXSISTING PAVEMENT ARE SIMILAR - SEE NOTES ABOVE

5 DETAIL - TRANS. BUTT JOINT AT TIE-IN TO EXIST.

1 1/2" = 1'-0"

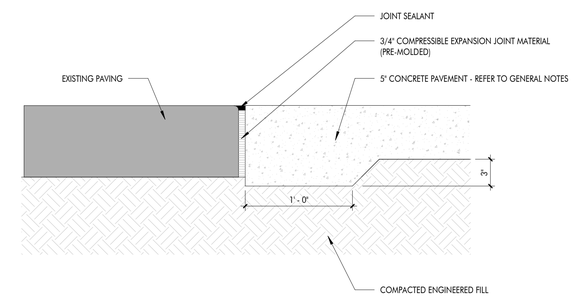

8 DETAIL - SIDE WALK

1 1/2" = 1'-0"

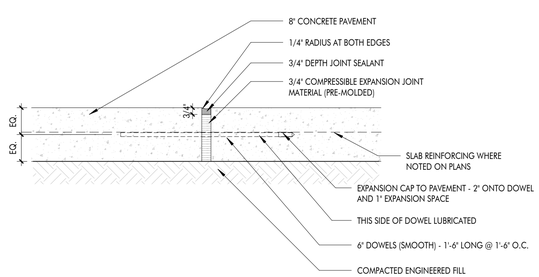

3 DETAIL - EXPANSION JOINT (EJ)

1 1/2" = 1'-0"

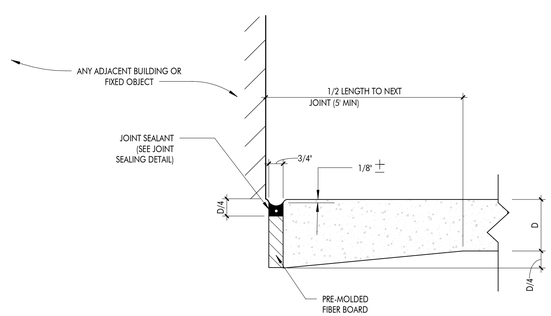

6 DETAIL - THICKENED EDGE JOINT

3" = 1'-0"

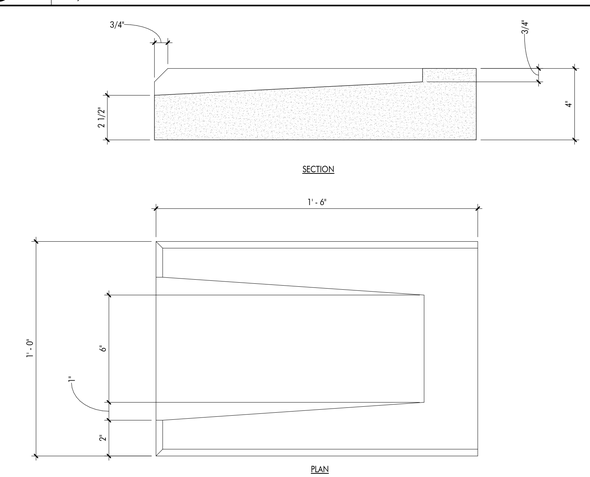

9 DETAIL - CONCRETE SPLASH BLOCK

3" = 1'-0"

DOMAIN APAC
ARCHITECTURE

www.domain-dsgn.com
8316 kelwood avenue
baton rouge, la 70806
225.216.3770 ph
225.216.3771 fax

SB-10593
ST. AMANT HIGH SCHOOL
MODULAR BUILDING TEMPORARY CAMPUS
12035 LA HWY 431, ST. AMANT, LA 70774

mechanical & electrical engineer:
CRUMB ENGINEERING
4609 FAIRFIELD STREET
METAIRIE, LA 70006
504.455.4450

structural engineer:

civil engineer:

landscape architect:

revisions

No.	Description	Date

PROJ. #: C16-0071C

date
OCTOBER 27, 2016

sheet
A2.5

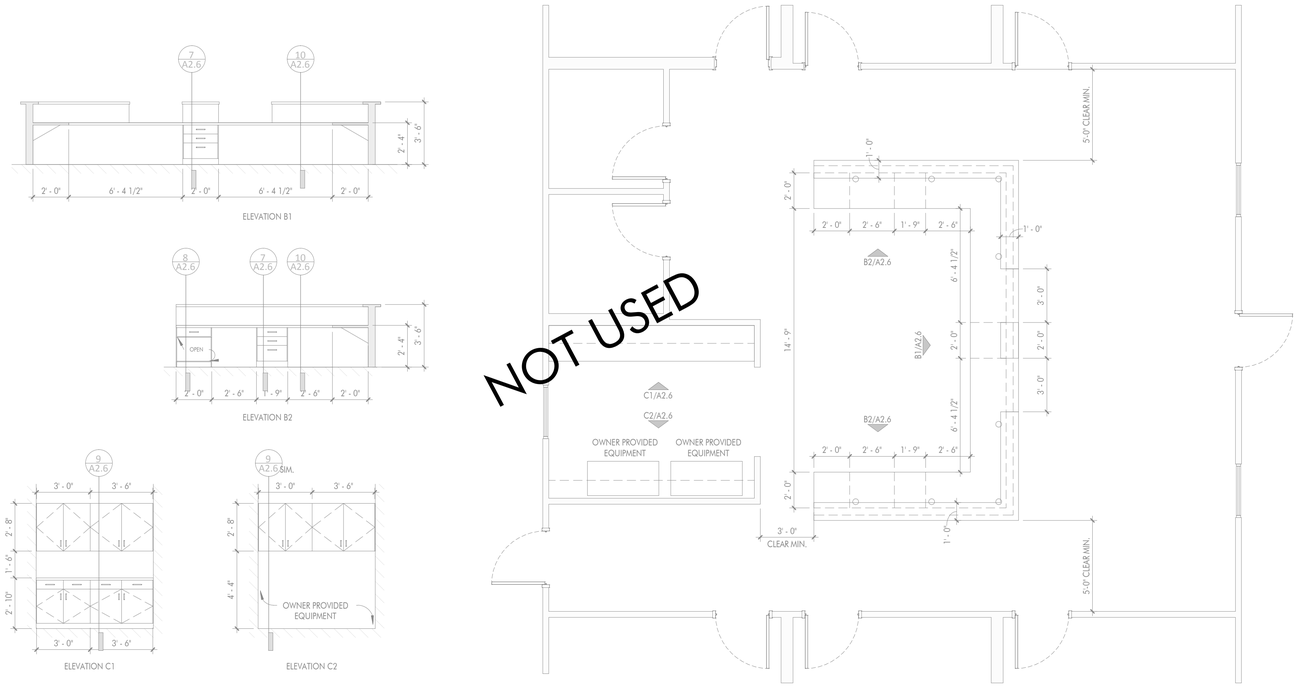

1 TYP. OFFICE ADMIN.
1/4" = 1'-0"

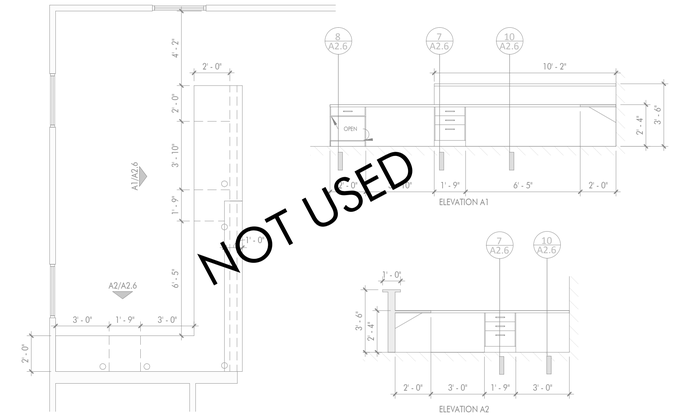

4 TYP. LIBRARY DESK
1/4" = 1'-0"

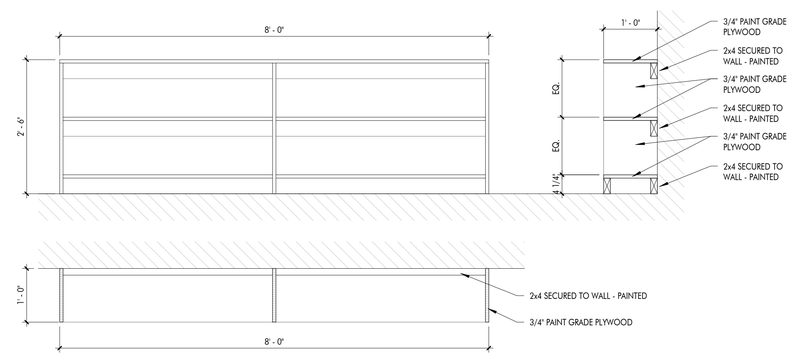

5 MILLWORK DETAIL (LOW CABINETS)
3/4" = 1'-0"

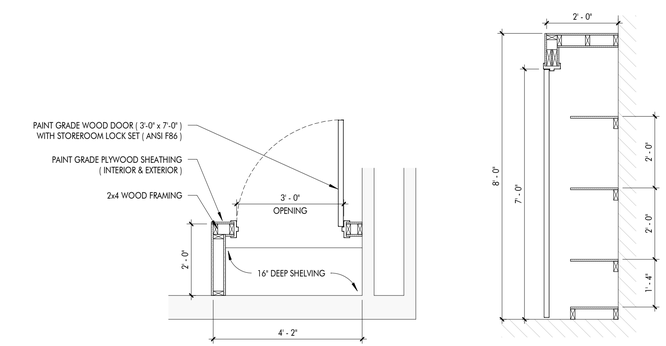

2 MILLWORK DETAIL
1/2" = 1'-0"

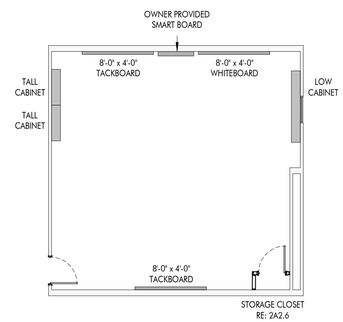

3 TYP. CLASSROOM LAYOUT
1/8" = 1'-0"

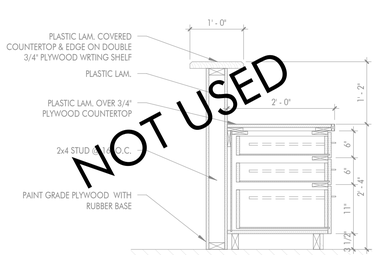

7 MILLWORK DETAIL
3/4" = 1'-0"

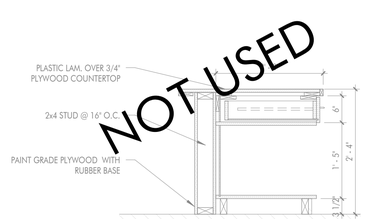

8 MILLWORK DETAIL
3/4" = 1'-0"

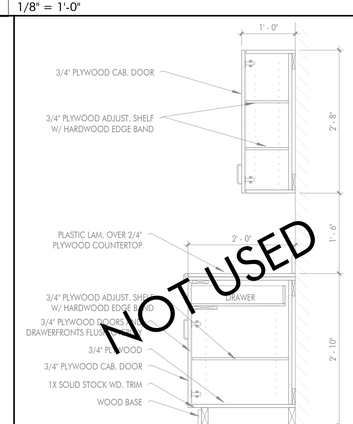

9 MILLWORK DETAIL
3/4" = 1'-0"

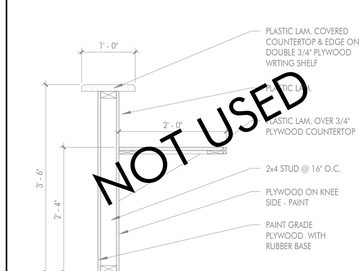

10 MILLWORK DETAIL
3/4" = 1'-0"

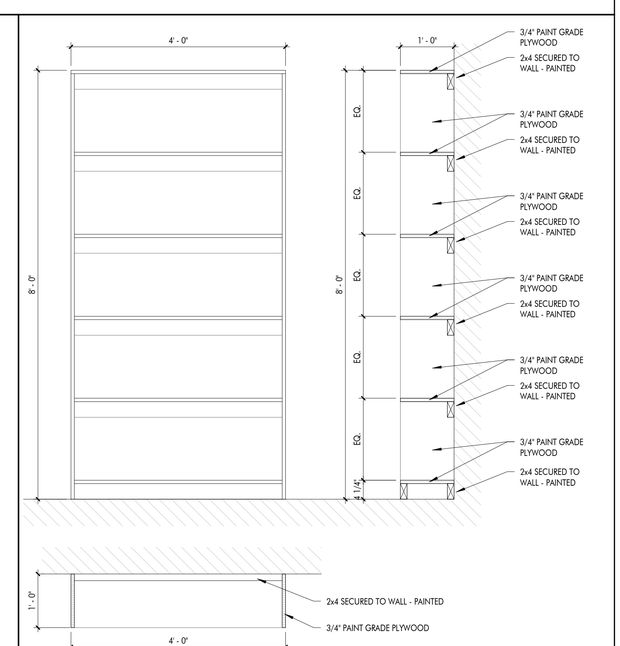

6 MILLWORK DETAIL (TALL CABINETS)
3/4" = 1'-0"

DOMAIN ARCHITECTURE APAC

www.domain-dsgn.com
8316 kelwood avenue
baton rouge, la 70806
225.216.3770 ph
225.216.3771 fax

SB-10593
ST. AMANT HIGH SCHOOL
MODULAR BUILDING TEMPORARY CAMPUS
12035 LA HWY 431, ST. AMANT, LA 70774

mechanical & electrical engineer:
CRUMB ENGINEERING
4609 FAIRFIELD STREET
METAIRIE, LA 70006
504.455.4450

structural engineer:

civil engineer:

landscape architect:

revisions

No.	Description	Date

PROJ. #: C16-0071C

date
OCTOBER 27, 2016

sheet
A2.6

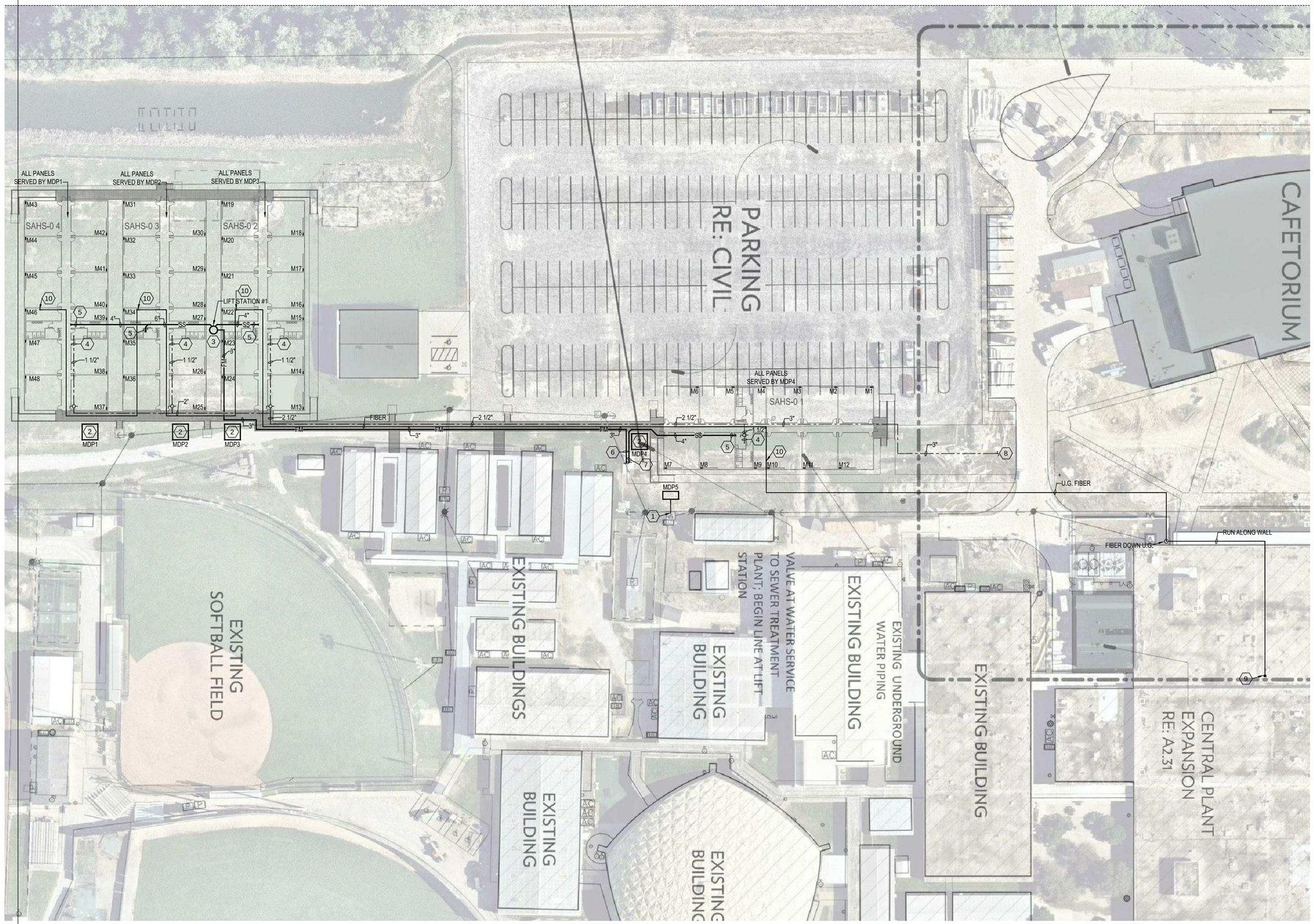

1 SITE PLAN - MECHANICAL AND ELECTRICAL
1" = 40'-0"

GENERAL NOTES THIS SHEET:

1. FIRE ALARM INSTALLATION SHALL CONFORM TO NFPA 72 AND 101. SUBMIT IN ACCORDANCE WITH STATE FIRE MARSHAL REQUIREMENTS. PROVIDE ALL REQUIRED WIRING, CONDUIT, BOXES, POWER SUPPLIES, ETC. AS REQUIRED FOR A FULLY OPERATIONAL CODE COMPLIANT SYSTEM.
2. ALL WIRING SHALL BE TYPE THHN. MODULAR BUILDING PANEL FEEDERS SHALL BE ALUMINUM. LIFT STATION FEEDERS SHALL BE COPPER.
3. ELECTRICAL CONDUITS SHALL BE SCH. 40 GRAY PVC RUN BELOW THE ELEVATED WALKWAYS OR UNDER THE MODULAR BUILDINGS. FEEDERS SHALL BE RUN FROM MDP TO EACH MODULAR BUILDING POWER PANEL OR LIFT STATION. THE MODULAR BUILDING POWER PANELS ARE SHOWN WITH AN 'M##' DESIGNATION. EXACT ROUTING SHALL BE DETERMINED IN FIELD UTILIZING THE ELEVATED WALKWAYS AND UNDER THE MODULAR BUILDINGS. UTILIZE JUNCTION BOXES OR LB FITTINGS AS REQUIRED. COORDINATE EXACT REQUIREMENTS WITH SUCCESSFUL MODULAR BUILDING CONTRACTOR.
4. GROUNDING SHALL BE IN ACCORDANCE WITH NEC ARTICLE 250.
5. PROVIDE 1 YEAR WARRANTY FOR LABOR AND MATERIALS. ALL EQUIPMENT SHALL BE INSTALLED IN ACCORDANCE WITH MANUFACTURER'S RECOMMENDATIONS.
6. CONTRACTOR SHALL CLEAN SURPLUS MATERIALS FROM SITE UPON COMPLETION AND LEAVE SITE EQUAL TO PRE-CONSTRUCTION QUALITY.
7. INSTALLATION SHALL CONFORM TO NEC AND LOCAL/STATE REQUIREMENTS.
8. PROVIDE NEW 2" CONDUIT(S) WITH FIBER FOR DATA . ROUTE CONDUIT ABOVE GROUND AND ROUTE THROUGH BUILDING TO EXISTING HEAD END AS NOTED ON THE DRAWINGS. VERIFY EXACT ROUTING AND REQUIREMENTS ON SITE. THE FIBER SHALL BE WIRED TO EACH MODULAR BUILDING AND DAISY CHAINED TO ALL MODULAR BUILDINGS.
9. IN GENERAL (2) DATA OUTLETS SHALL BE PROVIDED FOR EACH CLASSROOM. EACH MODULAR BUILDING SHA7LL HAVE A DATA RACK WITH FIBER, FIBER HEAD END, PATCH PANELS AND WIRING TO EACH STATION OUTLET. THE PATCH PANELS SHALL BE SIZED FOR 48 DROPS.
10. ALL EXPOSED FIRE ALARM, INTERCOM AND DATA WIRING TO BE RUN IN CONDUIT.
11. INTERCOM STATIONS TO BE AS SPECIFIED WITH ALL REQUIRED WIRING, CONDUIT, BOXES, ETC. AS REQUIRED FOR A FULLY OPERATIONAL EXPANSION TO THE SYSTEM.
12. COORDINATE EXACT LOCATION OF POWER PANELS, SEWER AND WATER CONNECTIONS IN NEW MODULAR BUILDINGS PRIOR TO RUNNING CONDUIT AND PIPING. MAKE ADJUSTMENTS AS NECESSARY.
13. FOR ALL NEW OPENINGS IN WALLS; SEAL, PATCH AND PAINT TO MATCH EXISTING WALL. OPENING SHALL BE SLIGHTLY LARGER THAN CONDUIT, NEATLY CUT/CORED AS APPLICABLE.
14. ROUTE WIRING IN MODULAR BUILDINGS ABOVE LAY-IN CEILING. USE SURFACE MOUNTED PLASTIC RACEWAY FOR EXPOSED DROPS TO DEVICES.
15. ALL CONDUIT RUNS THROUGH EXISTING CANOPIES OR BUILDINGS SHALL BE RUN IN A NEAT WORKMANLIKE MANNER, PARALLEL TO BUILDING LINES AND CONCEALED WHERE POSSIBLE. REMOVE AND REINSTALL CEILING TILES AS REQUIRED. ON CANOPIES RUN IN PIPE RACKS WITHOUT CAUSING A VISUAL DISTRACTION AND MAINTAIN THE MAXIMUM HEADROOM POSSIBLE. COORDINATE EXACT ROUTING WITH ARCHITECT PRIOR TO INSTALLATION.
16. MODULAR BUILDINGS ARE PRE-PLUMBED FOR PIPING IN WALLS. EACH BUILDING RECEIVES A 1-1/2" WATER AND 4" SEWER CONNECTION. PROVIDE A SHUTOFF VALVE AT WATER CONNECTION. THE SEWER OUTLET FROM EACH FIXTURE SHALL BE PIPED TOGETHER BY THIS CONTRACTOR AND CONNECTED TO THE SERVICE MAIN.
17. COORDINATE ELECTRICAL SERVICE WITH DEMCO. SEE SPECIFICATIONS FOR UTILITY SERVICE ALLOWANCE.
18. POWER RECEPTACLES FOR CEILING PROJECTORS TO BE WIRED FROM MODULAR BUILDING PANELS. PROVIDE MOUNTING BRACKETS AND ACCESSORIES AS INDICATED IN SPECIFICATIONS. PROJECTOR AND ELECTRONIC BOARD SUPPLIED BY OWNER.
19. PROVIDE LED CANOPY LIGHTS FOR ALL COVERED WALKWAYS. LIGHTS SHALL BE INSTALLED 20' ON CENTER AND CIRCUITS HOMERUN TO MDP PANELS THRU PHOTOCELLS. NO MORE THAN 50 LIGHTS SHALL BE INSTALLED ON A CIRCUIT AND WIRE SHALL BE UPSIZED TO #10AWG. PROVIDE AN ALLOWANCE OF $75 PER FIXTURE. THE FIXTURE MODEL WILL BE PROVIDED BY THE OWNER TO MATCH THE SCHOOL BOARD STANDARD.
20. SEE ME2.01 FOR LARGE SCALE MODULAR BUILDING PLANS.
21. SEE ME3.01 FOR LIFT STATION DETAILS AND ELECTRICAL FEEDER DIAGRAMS.

SPECIFIC NOTES THIS SHEET:

1. EXISTING DEMCO 1500KVA, 480V TRANSFORMER.
2. 12'X12'X4" THICK REINFORCED PAD WITH MDP, 225KVA, TRANSFORMER & 400A DS. SEE ME2.01.
3. SEWER LIFT STATION. SET BASIN IN GROUND. SEE DETAIL ON SHEET ME3.01.
4. 1 1/2" CW SERVICE TO MODULAR BUILDING. ONE CENTRAL CONNECTION POINT FOR EACH BUILDING.
5. 4" SEWER TO MODULAR BUILDING. EACH FIXTURE TO BE PIPED FROM WASTE OUTLET TO 4" SEWER SERVICE. SEE SHEET ME2.01.
6. 3" FORCED MAIN. CONNECT TO EXISTING LIFT STATION.
7. 4" SEWER MAIN. CONNECT TO EXISTING LIFT STATION.
8. NEW 3" WATER SERVICE. CONNECT TO EXISTING U.G. WATER MAIN.
9. APPROXIMATE LOCATION OF MDF IN LIBRARY. RUN NEW CONDUIT AND FIBER ABOVE CEILING OUT REAR OF BUILDING.
10. FIBER TO IT RACK. DAISY CHAIN AND RUN TO NEXT MODULAR BUILDING.

DOMAIN APAC ARCHITECTURE

www.domain-dsgn.com
8316 kelwood avenue
baton rouge, la 70806
225.216.3770 ph
225.216.3771 fax

STATE OF LOUISIANA
JASON T. CRUMB
License No. 27554
PROFESSIONAL ENGINEER

SB-10593
ST. AMANT HIGH SCHOOL
MODULAR BUILDING TEMPORARY CAMPUS
12035 LA HWY 431, ST. AMANT, LA 70774

mechanical & electrical engineer:
CRUMB ENGINEERING
4609 FAIRFIELD STREET
METAIRIE, LA 70006
504.455.4450

CRUMB ENGINEERING, LLC
4609 Fairfield Street
Metairie, La 70006
P-504.455.4450
F-504.455.4451
crumbengineering.com

revisions

No.	Description	Date
	BID SET	10-27-16

PROJ. #:

date
OCTOBER 27, 2016

sheet
ME1.01

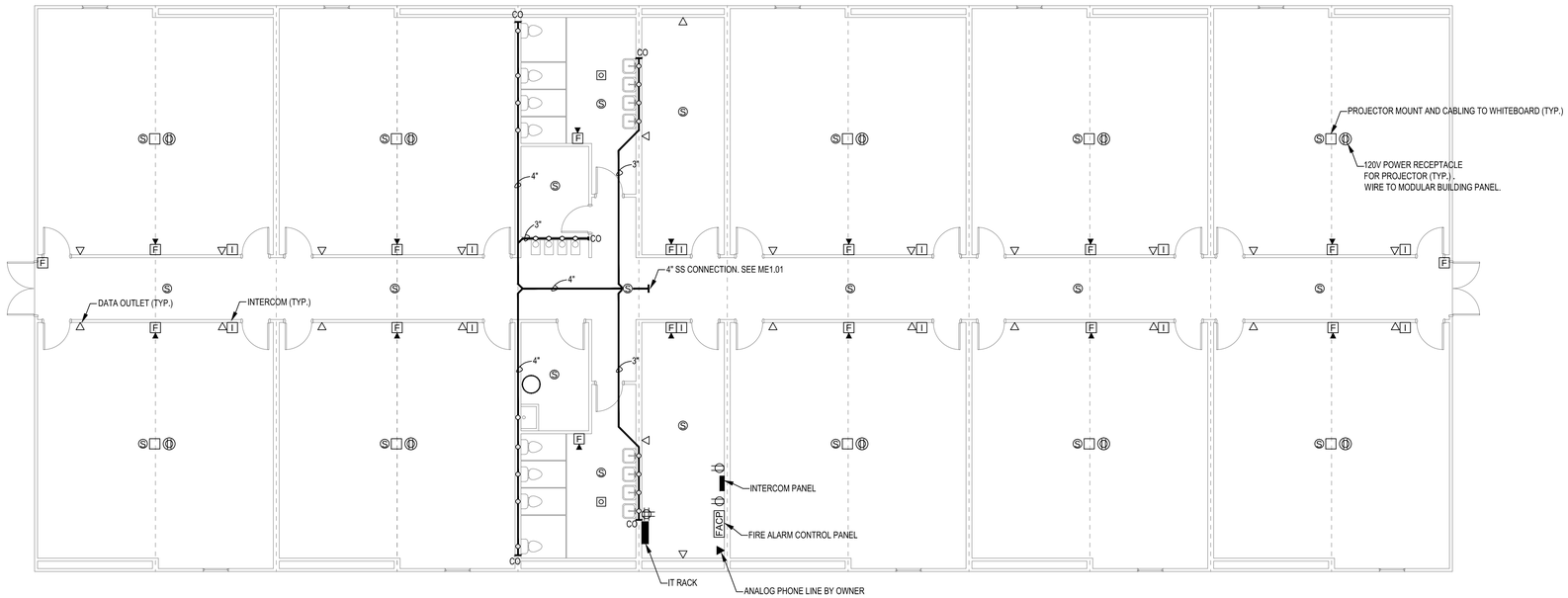

GENERAL NOTES THIS SHEET:

1. FIRE ALARM INSTALLATION SHALL CONFORM TO NFPA 72 AND 101. SUBMIT IN ACCORDANCE WITH STATE FIRE MARSHAL REQUIREMENTS. PROVIDE ALL REQUIRED WIRING, CONDUIT, BOXES, POWER SUPPLIES, ETC. AS REQUIRED FOR A FULLY OPERATIONAL CODE COMPLIANT SYSTEM.

2. ALL WIRING SHALL BE TYPE THHN. MODULAR BUILDING PANEL FEEDERS SHALL BE ALUMINUM. LIFT STATION FEEDERS SHALL BE COPPER.

3. ELECTRICAL CONDUITS SHALL BE SCH. 40 GRAY PVC RUN BELOW THE ELEVATED WALKWAYS OR UNDER THE MODULAR BUILDINGS. FEEDERS SHALL BE RUN FROM MDP TO EACH MODULAR BUILDING POWER PANEL OR LIFT STATION. THE MODULAR BUILDING POWER PANELS ARE SHOWN WITH AN 'M##' DESIGNATION. EXACT ROUTING SHALL BE DETERMINED IN FIELD UTILIZING THE ELEVATED WALKWAYS AND UNDER THE MODULAR BUILDINGS. UTILIZE JUNCTION BOXES OR LB FITTINGS AS REQUIRED. COORDINATE EXACT REQUIREMENTS WITH SUCCESSFUL MODULAR BUILDING CONTRACTOR.

4. GROUNDING SHALL BE IN ACCORDANCE WITH NEC ARTICLE 250.

5. PROVIDE 1 YEAR WARRANTY FOR LABOR AND MATERIALS. ALL EQUIPMENT SHALL BE INSTALLED IN ACCORDANCE WITH MANUFACTURER'S RECOMMENDATIONS.

6. CONTRACTOR SHALL CLEAN SURPLUS MATERIALS FROM SITE UPON COMPLETION AND LEAVE SITE EQUAL TO PRE-CONSTRUCTION QUALITY.

7. INSTALLATION SHALL CONFORM TO NEC AND LOCAL/STATE REQUIREMENTS.

8. PROVIDE NEW 2" CONDUIT(S) WITH FIBER FOR DATA . ROUTE CONDUIT ABOVE GROUND AND ROUTE THROUGH BUILDING TO EXISTING HEAD END AS NOTED ON THE DRAWINGS. VERIFY EXACT ROUTING AND REQUIREMENTS ON SITE. THE FIBER SHALL BE WIRED TO EACH MODULAR BUILDING AND DAISY CHAINED TO ALL MODULAR BUILDINGS.

9. IN GENERAL (2) DATA OUTLETS SHALL BE PROVIDED FOR EACH CLASSROOM. EACH MODULAR BUILDING SHA7LL HAVE A DATA RACK WITH FIBER, FIBER HEAD END, PATCH PANELS AND WIRING TO EACH STATION OUTLET. THE PATCH PANELS SHALL BE SIZED FOR 48 DROPS.

10. ALL EXPOSED FIRE ALARM, INTERCOM AND DATA WIRING TO BE RUN IN CONDUIT.

11. INTERCOM STATIONS TO BE AS SPECIFIED WITH ALL REQUIRED WIRING, CONDUIT, BOXES, ETC. AS REQUIRED FOR A FULLY OPERATIONAL EXPANSION TO THE SYSTEM.

12. COORDINATE EXACT LOCATION OF POWER PANELS, SEWER AND WATER CONNECTIONS IN NEW MODULAR BUILDINGS PRIOR TO RUNNING CONDUIT AND PIPING. MAKE ADJUSTMENTS AS NECESSARY.

13. FOR ALL NEW OPENINGS IN WALLS; SEAL, PATCH AND PAINT TO MATCH EXISTING WALL. OPENING SHALL BE SLIGHTLY LARGER THAN CONDUIT, NEATLY CUT/CORED AS APPLICABLE.

14. ROUTE WIRING IN MODULAR BUILDINGS ABOVE LAY-IN CEILING. USE SURFACE MOUNTED PLASTIC RACEWAY FOR EXPOSED DROPS TO DEVICES.

15. ALL CONDUIT RUNS THROUGH EXISTING CANOPIES OR BUILDINGS SHALL BE RUN IN A NEAT WORKMANLIKE MANNER, PARALLEL TO BUILDING LINES AND CONCEALED WHERE POSSIBLE. REMOVE AND REINSTALL CEILING TILES AS REQUIRED. ON CANOPIES RUN IN PIPE RACKS WITHOUT CAUSING A VISUAL DISTRACTION AND MAINTAIN THE MAXIMUM HEADROOM POSSIBLE. COORDINATE EXACT ROUTING WITH ARCHITECT PRIOR TO INSTALLATION.

16. MODULAR BUILDINGS ARE PRE-PLUMBED FOR PIPING IN WALLS. EACH BUILDING RECEIVES A 1-1/2" WATER AND 4" SEWER CONNECTION. PROVIDE A SHUTOFF VALVE AT WATER CONNECTION. THE SEWER OUTLET FROM EACH FIXTURE SHALL BE PIPED TOGETHER BY THIS CONTRACTOR AND CONNECTED TO THE SERVICE MAIN.

17. COORDINATE ELECTRICAL SERVICE WITH DEMCO. SEE SPECIFICATIONS FOR UTILITY SERVICE ALLOWANCE.

18. POWER RECEPTACLES FOR CEILING PROJECTORS TO BE WIRED FROM MODULAR BUILDING PANELS. PROVIDE MOUNTING BRACKETS AND ACCESSORIES AS INDICATED IN SPECIFICATIONS. PROJECTOR AND ELECTRONIC BOARD SUPPLIED BY OWNER.

19. PROVIDE LED CANOPY LIGHTS FOR ALL COVERED WALKWAYS. LIGHTS SHALL BE INSTALLED 20' ON CENTER AND CIRCUITS HOMERUN TO MDP PANELS THRU PHOTOCELLS. NO MORE THAN 50 LIGHTS SHALL BE INSTALLED ON A CIRCUIT AND WIRE SHALL BE UPSIZED TO #10AWG. PROVIDE AN ALLOWANCE OF $75 PER FIXTURE. THE FIXTURE MODEL WILL BE PROVIDED BY THE OWNER TO MATCH THE SCHOOL BOARD STANDARD.

20. SEE ME2.01 FOR LARGE SCALE MODULAR BUILDING PLANS.

21. SEE ME3.01 FOR LIFT STATION DETAILS AND ELECTRICAL FEEDER DIAGRAMS.

1 10 CLASSROOM MODULAR BUILDING PLAN - MECHANICAL AND ELECTRICAL
1/8" = 1'-0"

DOMAIN APAC ARCHITECTURE

www.domain-dsgn.com
8316 kelwood avenue
baton rouge, la 70806
225.216.3770 ph
225.216.3771 fax

STATE OF LOUISIANA
JASON T. CRUMB
License No. 27954
PROFESSIONAL ENGINEER

SB-10593
ST. AMANT HIGH SCHOOL
MODULAR BUILDING TEMPORARY CAMPUS
12035 LA HWY 431, ST. AMANT, LA 70774

mechanical & electrical engineer:
CRUMB ENGINEERING
4609 FAIRFIELD STREET
METAIRIE, LA 70006
504.455.4450

CRUMB ENGINEERING, LLC
4609 Fairfield Street
Metairie, La 70006
P-504.455.4450
F-504.455.4451
crumbengineering.com

revisions

No.	Description	Date
	BID SET	10-27-16

PROJ. #:

date
OCTOBER 27, 2016

sheet
ME2.01

OCTOBER 27, 2016

ELECTRICAL LEGEND

SYMBOL	DESCRIPTION
(J)	JUNCTION BOX
GFI	DUPLEX RECEPT. W/GROUND FAULT INTERRUPTER
	HOME RUN TO PANEL
	DISCONNECT SWITCH W/VISIBLE BLADES
(M)	ELECTRIC METER
F	INTELLIGENT ADDRESSABLE FIRE ALARM PULL STATION. PROVIDE BOX FOR SURFACE MOUNTING. MATCH EXISTING SYSTEM.
F	75 CD SPEAKER/STROBE. PROVIDE 4" SQ SURFACE MOUNT BOX. MOUNT DEVICE 80" AFF MINIMUM, 96" AFF MAXIMUM. MATCH EXISTING SYSTEM.
I	INTERCOM STATION. PROVIDE SURFACE MOUNT SINGLE GANG BOX.
(S)	INTELLIGENT ADDRESSABLE FIRE ALARM SMOKE DETECTOR. PROVIDE BOX FOR SURFACE MOUNTING.

MECHANICAL LEGEND

SYMBOL	DESCRIPTION	SYMBOL	DESCRIPTION
— – —	COLD WATER	RAG	RETURN AIR GRILLE
— – – —	HOT WATER	RD	ROOF DRAIN
— – – – —	HOT WATER CIRCULATING	(TYP)	TYPICAL
- - - - - -	VENT	VTR	VENT THRU ROOF
— SS —	SANITARY SEWER	VD	VOLUME DAMPER
— FM —	FORCED MAIN	DF	DRINKING FOUNTAIN
CO	CLEAN OUT	CONN.	CONNECTION
CFM	CUBIC FEET PER MINUTE	O/A	OUTSIDE AIR
CW	COLD WATER	P 1	PLUMBING RISER DIAGRAM
HW	HOT WATER		GATE VALVE
CLG.	CEILING		CHECK VALVE
DN	DOWN		VALVE IN VERTICAL RISE
EF	EXHAUST FAN		UNION
FD	FLOOR DRAIN		FLOOR DRAIN
HB	HOSE BIBB		HOSE BIBB
RA	RETURN AIR		AIR CHAMBER (10" HIGH PIPE)

SPECIFIC NOTES THIS SHEET:

1. 1¼"C, 3 -#1 AL AWG & 1-#6 AL GRD. CONNECT TO MODULAR BUILDING PANEL. TYPICAL FOR EACH PANELS SHOWN ON ME1.01.
2. RUN CONDUIT UNDERGROUND.
3. PROVIDE 400A, 3P, 100 KAIC BREAKER IN MDP5 FOR MDP.
4. EXISTING 1500 KVA DEMCO TRANSFORMER,.
5. 800A, 120/ 208V, 3P, 4W, 22KAIC FREESTANDING NEMA- 3R MDP WITH 800A MAIN AND (12) - 100A, 2P BREAKERS. FOR MODULAR BUILDINGS. MDP3 TO INCLUDE (1) 30A, 3P BREAKER FOR LIFT STATION 1.
6. 5 SETS OF 4"C WITH 4- 600 KCMIL AL AND 1- 250 KCMIL AL GRD IN EACH.
7. 225 KVA, 480V: 120/ 208V, 3- PHASE OUTDOOR RATED, NEMA- TP-1 TRANSFORMER WITH WEATHER SHIELD.
8. 480V, 400A, 3P FREESTANDING NEMA- 3R DS.
9. 2 SETS OF 2½"C WITH 3- 250 KCMIL AL AND 1# 1/0 AL GRD IN EACH.
10. 250 KCMIL GRD TO (2) x ¾"Ø x 10' COPPER BONDED GROUND RODS.
11. 14'x 14'x 6" THICK REINFORCED CONCRETE PAD.
12. 3 SETS OF 3"C WITH 4-500 KCMIL AL AND 1 # 3/0 AL GRD IN EACH.

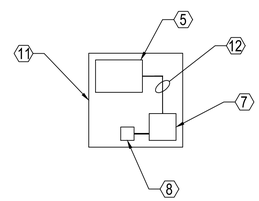

TYPICAL MDP SERVICE
NO SCALE

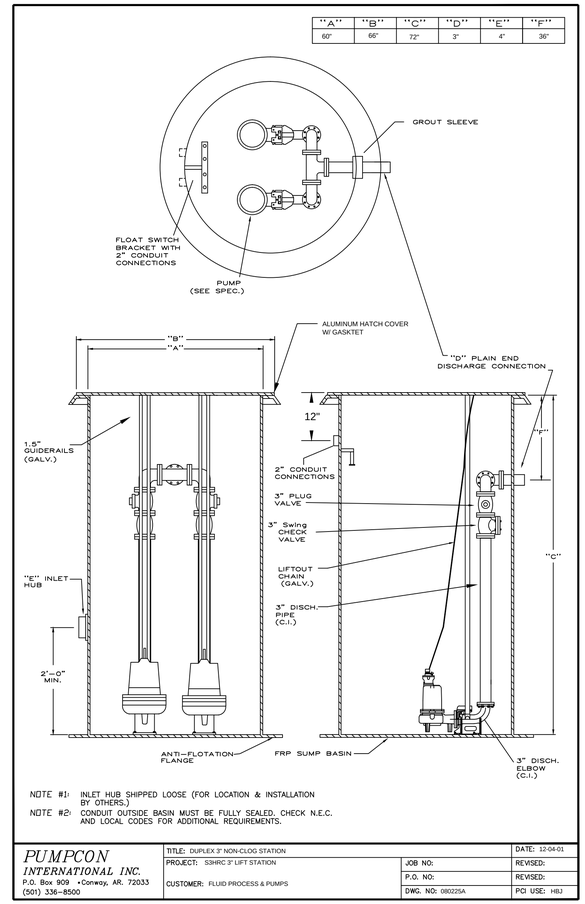

LIFT STATION 1

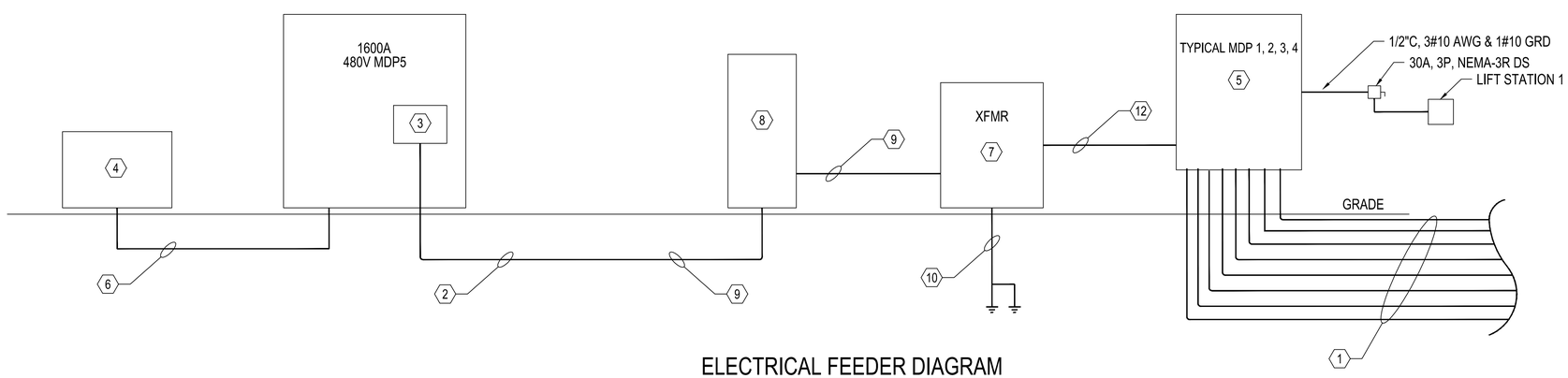

ELECTRICAL FEEDER DIAGRAM
NO SCALE

SCHEDULES AND DETAILS

DOMAIN ARCHITECTURE APAC

www.domain-dsgn.com
8316 kelwood avenue
baton rouge, la 70806
225.216.3770 ph
225.216.3771 fax

STATE OF LOUISIANA
JASON T. CRUMB
License No. 27954
PROFESSIONAL ENGINEER

SB-10593
ST. AMANT HIGH SCHOOL
MODULAR BUILDING TEMPORARY CAMPUS
12035 LA HWY 431, ST. AMANT, LA 70774

mechanical & electrical engineer:
CRUMB ENGINEERING
4609 FAIRFIELD STREET
METAIRIE, LA 70006
504.455.4450

CRUMB ENGINEERING, LLC
4609 Fairfield Street
Metairie, La 70006
P-504.455.4450
F-504.455.4451
crumbengineering.com

revisions

No.	Description	Date
	BID SET	10-27-16

PROJ. #:

date
OCTOBER 27, 2016

sheet
ME3.01

Definitions

A. Shall – The term "shall" denotes mandatory requirements

B. Must – The term "must" denotes mandatory requirements

C. May – The term "may" denotes an advisory or permissible action.

D. Should – The term "should" denotes desirable

E. Allows – The term "allows" denotes desirable

F. Contractor – Any person having a contract with a governmental body.

G. APS – Ascension Public Schools

Question and Answers for Bid #SB-10593 - St. Amant High School - Modular Building Temporary Campus

Overall Bid Questions

There are no questions associated with this bid.

Question Deadline: Nov 17, 2016 1:00:00 PM CST